CHAPTER 2
7800/78M00 Positive, 3-Terminal Voltage Regulators

INTRODUCTION

The 7800 series circuits are self contained, 3-terminal regulators specifically intended for use in a wide variety of fixed output voltage applications. The combination of internal current limiting, safe area compensation, and thermal shutdown makes these devices immune to the failure modes normally associated with power regulator applications.

Two families of positive 3-terminal regulators are available differing only in their maximum output current rating.

- 78M00 series in a hermetic TO-39 package, or molded TO-220 package, rated at 0.5 A.
- 7800 series in a hermetic TO-3 package, or molded TO-220 package, rated at 1.0 A.

Since the electrical characteristics of the two families are virtually identical, only the 7800 series is described. Regulators are available in fixed output voltage options from 5 to 24 V. These options are first determined during the manufacturing process by the selection of an internal resistor matrix, RA, in the block diagram of *Figure 2-1* and, second, for an operating junction temperature range of –55 to +150°C for the 7800 or 0 to +125°C for the 7800C.

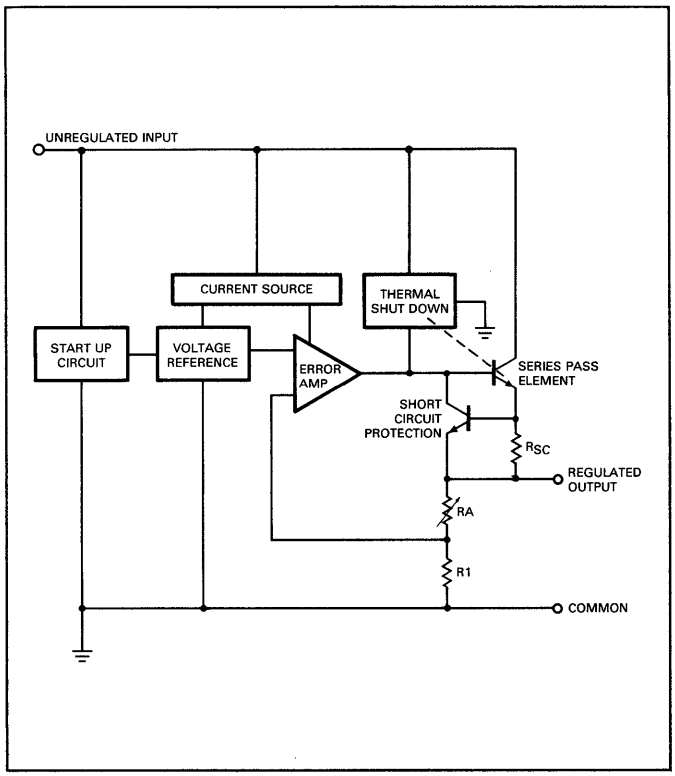

Fig. 2-1 Block Diagram of the 3-Terminal Regulator

Output voltages are specified at approximately ±4% of the nominal voltage. In applications where closer tolerance outputs are required, external components may be added allowing the output voltage to be adjusted precisely. External pass transistors may be added to increase the current handling capabilities of the regulator. These, and other applications are illustrated in Chapter 3.

VOLTAGE REFERENCE

Temperature compensated Zener diodes are normally used as reference elements in IC voltage regulators; however, these diodes exhibit breakdown voltages above 6 V, thus imposing a lower limit on the input voltage to the regulator. Zeners also require excessively tight process controls to maintain a satisfactory tolerance for any nonadjustable (3-terminal) application.

A voltage reference which does not use a Zener diode has been developed from the predictable temperature, current and voltage relationships in an emitter base junction. To obtain a temperature compensated reference voltage, the positive temperature coefficient of an emitter base voltage differential between two transistors operated at different current densities is added to the negative temperature coefficent of emitter base voltage. *Figure 2-2* shows such a reference. Transistor Q1 operates at a considerably higher current level than Q2 and the emitter base voltage differential is amplified by the voltage gain of transistor Q2.

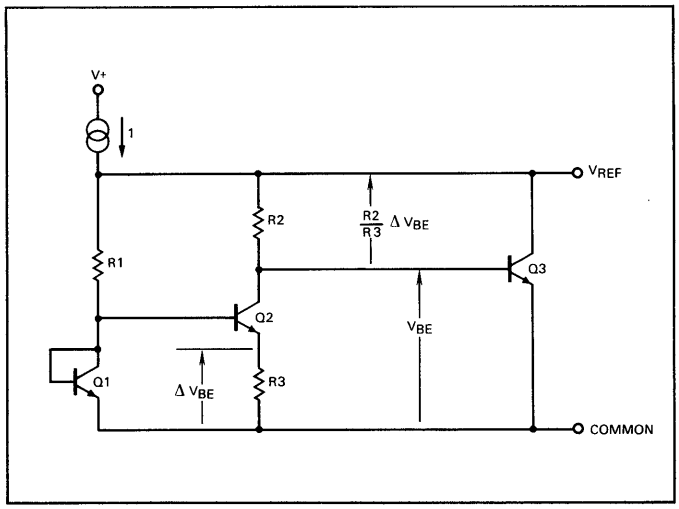

Fig. 2-2 Voltage Reference Based on Base-Emitter Voltage

The reference voltage can be expressed as follows.

$$V_{REF} = V_{BE3} + I_{CQ2}\ R2 + I_{BQ3}\ R2$$

$$V_{REF} = V_{BE3} + \frac{R2}{R3}\ (\Delta V_{BE}) + I_{BQ3}\ R2$$

$$V_{REF} = V_{BE3} + \frac{R2}{R3}\ \left(\frac{KT}{q}\ \text{Ln}\ \frac{J1}{J2}\right) + I_{BQ3}\ R2$$

$$V_{REF} \cong V_{BE3} + \frac{R2}{R3}\ \left(\frac{KT}{q}\ \text{Ln}\ \frac{R2}{R1}\right)$$

where J is current density.

By selecting the resistor ratios R2:R3 and R2:R1, a low voltage, temperature compensated reference is obtained.

Figure 2-3 shows a simplified schematic of the actual circuit used in the regulator. Transistors Q4, Q5 and Q6 are added to increase the reference level to 5 V.

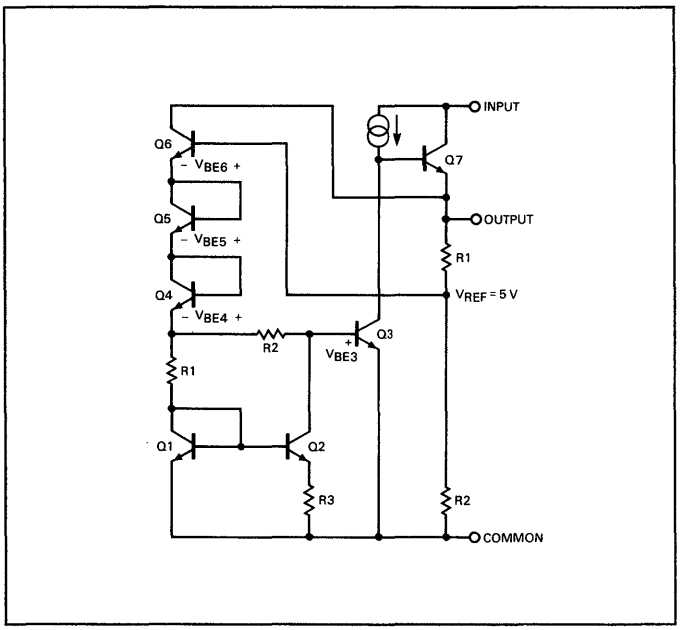

Fig. 2-3 Simplified Circuit for the Regulator

The reference then becomes:

$$V_{REF} = (V_{BE3} + V_{BE4} + V_{BE5} + V_{BE6}) + \frac{R2}{R3}\left(\frac{KT}{q}\,Ln\,\frac{R2}{R1}\right)$$

Resistors R1, R2 and R3 are selected so that the reference voltage is constant over the temperature range and also has a nominal value of 5 V at room temperature.

An extremely tight reference voltage tolerance is, therefore, obtained without special process controls. This is because base emitter characteristics are better understood and more predictable than Zener references. Also, monolithic circuits lend themselves more readily to resistor and transistor matching. An external adjustment to trim output voltage is unnecessary in most applications. An additional benefit is that this reference has low noise output compared to a Zener reference, thus eliminating the need for a large bypass capacitor to remove noise.

ERROR AMPLIFIER

An error amplifier (see *Figure 2-1)* compares the output feedback signal with the voltage reference and corrects the output by the amount of the error. The regulator circuit shown in *Figure 2-3* has the error amplifier combined with the voltage reference. The advantage is that noise at the regulator output is minimized since the amplifier and reference are no longer separate sources of noise. In *Figure 2-3,* transistor Q3 is used as the error amplifier; and at the same time, its base emitter voltage is used as part of the reference.

A current source is used as the active load to the error amplifier. A negative feedback path is provided through feedback resistors R1 and R2. If the voltage at the output increases due to a reduction in load current, that voltage change is transmitted to the base of transistor Q3. Transistor Q3, then, conducts more, effectively reducing the base drive to the output transistor by current steering. The result is a decrease in output voltage, and this tends to correct the change in output voltage due to the load current change. As the loop settles, an equilibrium value at the output is reached. The output voltage is derived using the following formula.

$$\text{Output Voltage} = V_{REF}\left(\frac{R1 + R2}{R2}\right)$$

Varying the resistor ratio R1 + R2:R2 yields different fixed output voltages.

THERMAL OVERLOAD PROTECTION

One of the benefits of including the series pass transistor on the chip is that it is then possible to incorporate both thermal and current overload protection.

Low power IC regulators usually rely on current limiting for overload protection as there is no practical way to sense junction temperature in a separate pass transistor. Excessive heating of the pass transistor, then, becomes one of the primary failure mechanisms of these solid state regulators. A thermal overload protection circuit in a monolithic regulator which contains the pass transistor limits the maximum temperature of the transistor junction. This limiting is independent of input voltage and the type of overload/degree of package heat sinking.

The base emitter junction of a transistor limiter is used to sense the temperature of the chip. The temperature limiter normally is biased below its activation threshold so that it does not affect circuit operation. If the chip temperature rises to its maximum limit due to a load fault or other conditions, the temperature limiter turns on. This removes the base drive to the output transistors and shuts down the regulator, preventing further chip heating.

FUNCTIONAL DESCRIPTION

Figure 2-4 shows the equivalent schematic diagram of the IC regulator. Transistors Q1 through Q6 and resistors R1, R2 and R3 constitute a 5 V, temperature compensated internal voltage reference for the regulator. The base emitter voltages of transistors Q3, Q4, Q5 and Q6 provide the *negative* temperature coefficient component of the output voltage. The voltage drop across R2 is the *positive* temperature coefficient component. This is derived from the differential base emitter voltages across transistors Q1 and Q2, which operate at a current ratio of $\approx$20 to 1. The output voltage of the regulator is determined by selecting a ratio from a resistor matrix which multiplies the reference voltage. The current required by the load is supplied from the input terminal through the series pass transistor Q17, driven by transistor Q16. Transistor Q3 is the gain stage providing regulation. Its effective gain is increased by the pnp transistor Q11 which acts as a buffer to drive the active collector load formed by the pnp current source transistor pair, Q8 and Q9.

The current from Q8 and Q9 is set up by the current through resistor R1. During regulator turn on, the current in R1 flows first through transistor Q13 — part of a start up circuit containing Zener diode D1, transistors Q12 and Q13, and resistors R5, R6 and R7. After the device is in regulation, Q13 is biased off and the regulator takes over setting the current in R1, which now flows through Q5 and Q10. This start up circuit is required since the regulator which eventually is to supply the current in R1 is off during initial device turn on.

Thermal limiting is accomplished by transistor Q14. The base of Q14 is clamped to $\approx$0.4 V by the resistive divider string R5, R6 and R7 in the start up circuit. As the junction temperature rises, the turn on threshold of Q14 decreases. At a junction temperature of $\approx$175°C, transistor Q14 turns on and the base current drive to the drive transistor is removed. This shuts down the pass transistor and prevents further increases in chip temperature.

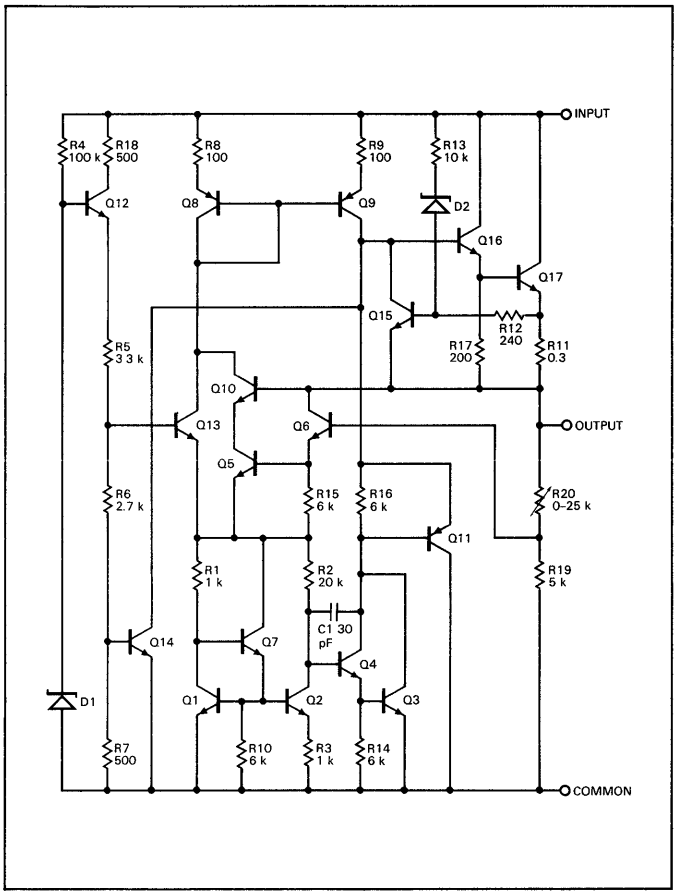

Fig. 2-4 Circuit Schematic of the 3-Terminal Regulator

Whereas this form of thermal protection is effective for *persistent* overloads which would cause excessive chip temperature, it is ineffective against *instantaneous* overloads which could result in a secondary breakdown of the pass transistor or damage to metal interconnections due to abnormally high current density. Transistor Q15 and resistor R11 protect against instantaneous overloads by limiting output current. If the output current rises to a high level, the current through R11 will turn on Q15, thus shunting base current away from the driver transistor and preventing further increases in output current.

To ensure that the output transistor operates within its forward safe area, a compensating network is included to limit the instantaneous power in the output transistor. When the voltage across the pass transistor exceeds 8 V, current through resistor R13 and diode D2 reduces the limiting current. As illustrated in *Figure 2-5,* the higher the voltage across the pass transistor, the lower the limiting current.

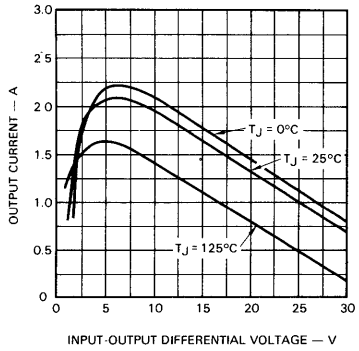

Fig. 2-5 Input-Output Differential vs Current Limit

An MOS capacitor of 30 pF is incorporated on the chip to ensure stable operation without the need for a bypass capacitor on the output.

Table 2-1 shows the typical performance characteristics of the regulator.

PARAMETER	TEST CONDITIONS (V_{OUT} = 5 V, T_J = 25°C, V_{IN} = 10 V AND I_{OUT} = 500 mA UNLESS OTHERWISE SPECIFIED)	CHARACTERISTICS 7805	78M05
OUTPUT TOLERANCE		±4%	±4%
QUIESCENT CURRENT		4.2 mA	4.5 mA
OUTPUT RESISTANCE	f = 1 kHz	20 mΩ	20 mΩ
LINE REGULATION	7 V ≤ V_{IN} ≤ 25 V	0.005%/V	.0033%/V
TEMPERATURE DRIFT	-20°C ≤ T_J ≤ 125°C	0.022%/°C	0.02%/°C
MINIMUM INPUT VOLTAGE	I_{OUT} = 1A (.5 A for 78M05)	7.0 V	7.0 V
OUTPUT NOISE VOLTAGE	10 Hz ≤ f ≤ 100 kHz	40 µV	40 µV
RIPPLE REJECTION	f = 120 Hz	78 dB	80 dB
THERMAL RESISTANCE (JUNCTION TO CASE)	TO-3 PACKAGE TO-220 PACKAGE TO-39 PACKAGE	4°C/W 4°C/W	 5°C/W 20°C/W

Table 2-1 Typical Characteristics (7805 and 78M05)

TESTING PHILOSOPHY

The 7800 series device is tested in a manner reflecting its intended usage. The input/output voltage differential used to test each device in the series takes into account all the variations in a nominal, unregulated dc source.

For example, the 7812 is tested with a 7 V input/output differential which considers the following parameters and their variations.

- Minimum device input/output differential
- Power supply ripple
- Line voltage tolerance
- Diode drop variation and source impedance variations

Table 2-2 presents the considerations resulting from the combination of all these factors and tolerances.

Therefore, not only is the 7812 tested with an additional guard band of 0.5 V (19 V total), but the input voltage range used for testing allows greater input voltage variation than found in actual use conditions. Other devices in the 7800 series are tested with the same practical considerations.

CONDENSED SPECIFICATIONS

The electrical characteristics listed below pertain specifically to the 7800 and 7800C series regulators. The 78M00 and 78M00C series have similar characteristics except that nominal and peak output currents are 200 mA and 750 mA respectively, instead of 500 mA and 2.2 A for the 7800 and 7800C.

$V_{O(max)}$ =	12.5 V
$V_{IN} - V_O$	2 V
Total	14.5 V
Line Variation = (10%)	1.4 V
Total	15.9 V
Ripple = (10%)	1.6 V
Total	17.5 V
R_S and V_d =	1.0 V
Total	18.5 V

Table 2-2 Derivation of Test Voltage

ABSOLUTE MAXIMUM RATINGS (7800, 7800C)

Input Voltage (5 V through 18 V)		35 V
(24 V)		40 V
Internal Power Dissipation (Note 1)		Internally Limited
Storage Temperature Range		−65°C to +150°C
Operating Junction Temperature Range	7800	−55°C to +150°C
	7800C	0°C to +125°C
Lead Temperature (Soldering, 60 second time limit) TO-3 Package		300°C
(Soldering, 10 second time limit) TO-220 Package		230°C

ABSOLUTE MAXIMUM RATINGS (78M00, 78M00C)

Input Voltage (5 V through 15 V)	35 V
(20 V, 24 V)	40 V
Internal Power Dissipation (Note 1)	Internally Limited
Storage Temperature Range	−65°C to +200°C
Operating Junction Temperature Range	
Military (78M00)	−55°C to +175°C
Commercial (78M00C)	0°C to +175°C (TO-39), 0°C to +125°C (TO-220)
Lead Temperature (Soldering, 60 second time limit) TO-39 Package	300°C
(Soldering, 10 second time limit) TO-220 Package	230°C

NOTE 1: Thermal resistance of the packages (without a heat sink)

Junction-to-Case

TO-3 Package	4°C/W
TO-220 Package	(78M00) 5°C/W, (7800) 4°C/W
TO-39 Package	20°C/W

Junction-to-Ambient

TO-3 Package	35°C/W
TO-220 Package	50°C/W
TO-39 Package	150°C/W

DROPOUT VOLTAGE AS A FUNCTION OF JUNCTION TEMPERATURE

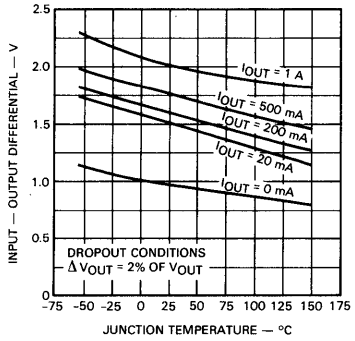

PEAK OUTPUT CURRENT AS A FUNCTION OF INPUT/OUTPUT DIFFERENTIAL VOLTAGE

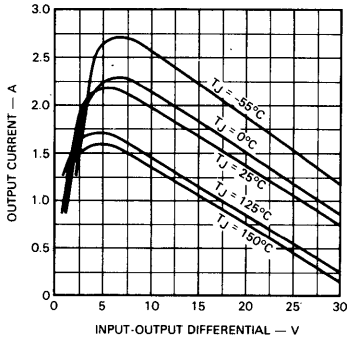

RIPPLE REJECTION AS A FUNCTION OF FREQUENCY

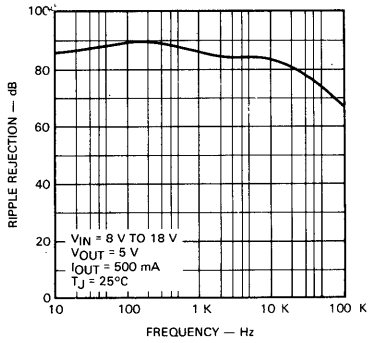

OUTPUT VOLTAGE AS A FUNCTION OF JUNCTION TEMPERATURE

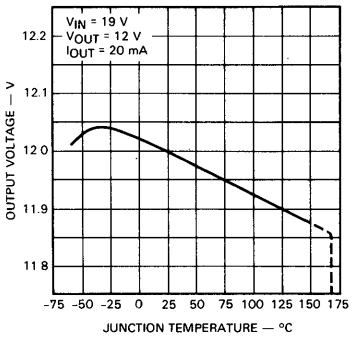

DROPOUT CHARACTERISTICS

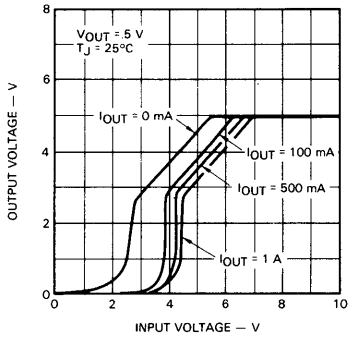

CURRENT LIMITING CHARACTERISTICS

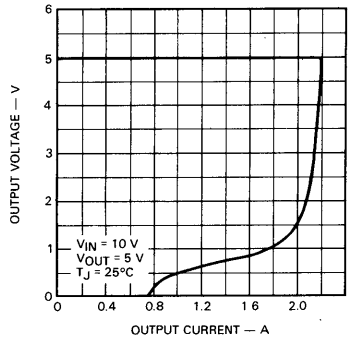

LOAD TRANSIENT RESPONSE

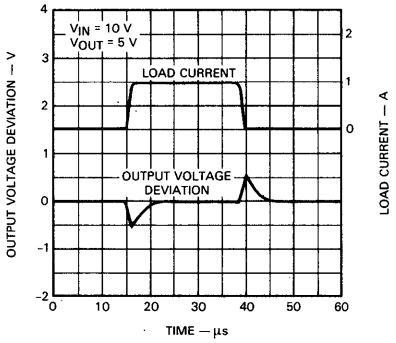

LINE TRANSIENT RESPONSE

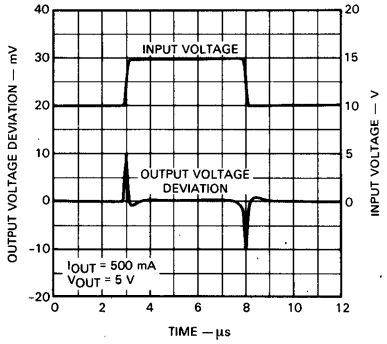

QUIESCENT CURRENT AS A FUNCTION OF INPUT VOLTAGE

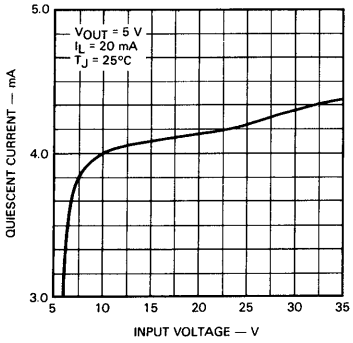

QUIESCENT CURRENT AS A FUNCTION OF TEMPERATURE

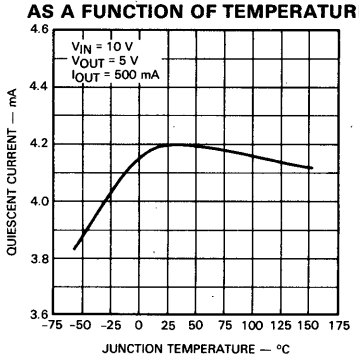

OUTPUT IMPEDANCE AS A FUNCTION OF FREQUENCY

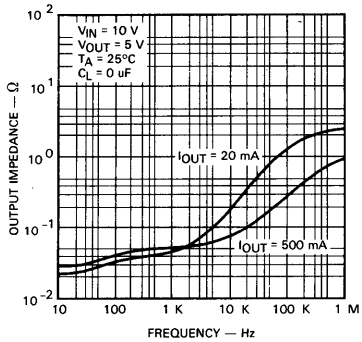

Fig. 2-6 Typical Performance Curves For 7800 Series

ELECTRICAL CHARACTERISTICS

V_{IN} = 10 V, I_{OUT} = 500 mA, −55°C ≤ T_J ≤ 150°C (7805) 0°C ≤ T_J ≤ 125°C (7805C) unless otherwise specified

PARAMETER		CONDITIONS		7805			7805C			UNITS
				MIN	TYP	MAX	MIN	TYP	MAX	
Output Voltage		T_J = 25°C		4.8	5.0	5.2	4.8	5.0	5.2	V
Line Regulation		T_J = 25°C	7.0 V ≤ V_{IN} ≤ 25V		3.0	50		3.0	100	mV
			8.0 V ≤ V_{IN} ≤ 12 V		1.0	25		1.0	50	mV
Load Regulation		T_J = 25°C	5.0 mA ≤ I_{OUT} ≤ 1.5 A		15	50		15	100	mV
			250 mA ≤ I_{OUT} ≤ 750 mA		5.0	25		5.0	50	mV
Output Voltage		8.0 V (7.0 V for 7805C) ≤ V_{IN} ≤ 20 V 5.0 mA ≤ I_{OUT} ≤ 1.0 A P ≤ 15 W		4.65		5.35	4.75		5.25	V
Quiescent Current		T_J = 25°C			4.2	6.0		4.2	8.0	mA
Quiescent Current Changes	with line	8.0 V (7.0 V for 7805C) ≤ V_{IN} ≤ 25 V				0.8			1.3	mA
	with load	5.0 mA ≤ I_{OUT} ≤ 1.0 A				0.5			0.5	mA
Output Noise Voltage		T_A = 25°C, 10 Hz ≤ f ≤ 100 kHz			40			40		μV
Long Term Stability						20			20	mV
Ripple Rejection		f = 120 Hz, 8.0 V ≤ V_{IN} ≤ 18 V		68	78		62	78		dB
Dropout Voltage		I_{OUT} = 1.0 A, T_J = 25°C			2.0			2.0		V
Output Resistance		f = 1.0 kHz			17			17		mΩ
Short Circuit Current		T_J = 25°C			750			750		mA
Peak Output Current		T_J = 25°C			2.2			2.2		A
Average TC of Output Voltage		I_{OUT} = 5.0 mA, 0°C ≤ T_J ≤ 150°C (7800)			−1.1					mV/°C
		I_{OUT} = 5.0 mA, 0°C ≤ T_J ≤ 125°C (7800C)						−1.1		mV/°C

ELECTRICAL CHARACTERISTICS

V_{IN} = 11 V, I_{OUT} = 500 mA, −55°C ≤ T_J ≤ 150°C (7806) 0°C ≤ T_J ≤ 125°C (7806C) unless otherwise specified

PARAMETER		CONDITIONS		7806			7806C			UNITS
				MIN	TYP	MAX	MIN	TYP	MAX	
Output Voltage		T_J = 25°C		5.75	6.0	6.25	5.75	6.0	6.25	V
Line Regulation		T_J = 25°C	8.0 V ≤ V_{IN} ≤ 25 V			5.0			120	mV
			9.0 V ≤ V_{IN} ≤ 13 V			1.5			60	mV
Load Regulation		T_J = 25°C	5.0 mA ≤ I_{OUT} ≤ 1.5 A			14			120	mV
			250 mA ≤ I_{OUT} ≤ 750 mA			4.0			60	mV
Output Voltage		9.0 V (8.0 V for 7806C) ≤ V_{IN} ≤ 21 V 5.0 mA ≤ I_{OUT} ≤ 1.0 A P≤ 15 W		5.65		6.35	5.7		6.3	V
Quiescent Current		T_J = 25°C			4.3	6.0		4.3	8.0	mA
Quiescent Current Change	with line	9.0 V (8.0 V for 7806C) ≤ V_{IN} ≤ 25 V				0.8			1.3	mA
	with load	5.0 mA ≤ I_{OUT} ≤ 1.0 A				0.5			0.5	mA
Output Noise Voltage		T_A = 25°C, 10 Hz ≤ f ≤ 100 kHz			45			45		μV
Long Term Stability						24			24	mV
Ripple Rejection		f = 120 Hz, 9.0 V ≤ V_{IN} ≤ 19 V		65	75		59	75		dB
Dropout Voltage		I_{OUT} = 1.0 A, T_J = 25°C			2.0			2.0		V
Output Resistance		f = 1.0 kHz			19			19		mΩ
Short Circuit Current		T_J = 25°C			550			550		mA
Peak Output Current		T_J = 25°C			2.2			2.2		A
Average TC of Output Voltage		I_{OUT} = 5.0 mA, 0°C ≤ T_J ≤ 150°C (7806)			−0.8					mV/°C
		I_{OUT} = 5.0 mA, 0°C ≤ T_J ≤ 125°C (7806C)						−0.8		mV/°C

ELECTRICAL CHARACTERISTICS

V_{IN} = 14 V, I_{OUT} = 500 mA, −55°C ≤ T_J ≤ 150°C (7808) 0°C ≤ T_J ≤ 125°C (7808C) unless otherwise specified

PARAMETER		CONDITIONS		7808			7808C			UNITS
				MIN	TYP	MAX	MIN	TYP	MAX	
Output Voltage		T_J = 25°C		7.7	8.0	8.3	7.7	8.0	8.3	V
Line Regulation		T_J = 25°C	10.5 V ≤ V_{IN} ≤ 25 V		6.0	80		6.0	160	mV
			11 V ≤ V_{IN} ≤ 17 V		2.0	40		2.0	80	mV
Load Regulation		T_J = 25°C	5.0 mA ≤ I_{OUT} ≤ 1.5 A		12	80		12	160	mV
			250 mA ≤ I_{OUT} ≤ 750 mA		4.0	40		4.0	80	mV
Output Voltage		11.5 V (10.5 V for 7808C) ≤ V_{IN} ≤ 23 V 5.0 mA ≤ I_{OUT} ≤ 1.0 A P ≤ 15 W		7.6		8.4	7.6		8.4	V
Quiescent Current		T_J = 25°C			4.3	6.0		4.3	8.0	mA
Quiescent Current Change	with line	11.5 V (10.5 V for 7808C) ≤ V_{IN} ≤ 25 V				0.8			1.0	mA
	with load	5.0 mA ≤ I_{OUT} ≤ 1.0 A				0.5			0.5	mA
Output Noise Voltage		T_A = 25°C, 19 Hz ≤ f ≤ 100 kHz			52			52		μV
Long Term Stability						32			32	mV
Ripple Rejection		f = 120 Hz, 11.5 V ≤ V_{IN} ≤ 21.5 V		62	72		56	72		dB
Dropout Voltage		I_{OUT} = 1.0 A, T_J = 25°C			2.0			2.0		V
Output Resistance		f = 1.0 kHz			16			16		mΩ
Short Circuit Current		T_J = 25°C			450			450		mA
Peak Output Current		T_J = 25°C			2.2			2.2		A
Average TC of Output Voltage		I_{OUT} = 5.0 mA, 0°C ≤ T_J ≤ 150°C (7808)			−0.8					mV/°C
		I_{OUT} = 5.0 mA, 0°C ≤ T_J ≤ 125°C (7808C)						−0.8		mV/°C

2

ELECTRICAL CHARACTERISTICS

V_{IN} = 19 V, I_{OUT} = 500 mA, −55°C ≤ T_J ≤ 150°C (7812) 0°C ≤ T_J ≤ 125°C (7812C) unless otherwise specified

PARAMETER		CONDITIONS		7812			7812C			UNITS
				MIN	TYP	MAX	MIN	TYP	MAX	
Output Voltage		T_J = 25°C		11.5	12	12.5	11.5	12	12.5	V
Line Regulation		T_J = 25°C	14.5 V ≤ V_{IN} ≤ 30 V		10	120		10	240	mV
			16 V ≤ V_{IN} ≤ 22 V		3.0	60		3.0	120	mV
Load Regulation		T_J = 25°C	5.0 mA ≤ I_{OUT} ≤ 1.5 A		12	120		12	240	mV
			250 mA ≤ I_{OUT} ≤ 750 mA		4.0	60		4.0	120	mV
Output Voltage		15.5 V (14.5 V for 7812C) ≤ V_{IN} ≤ 27 V 5.0 mA ≤ I_{OUT} ≤ 1.0 A P ≤ 15 W		11.4		12.6	11.4		12.6	V
Quiescent Current		T_J = 25°C			4.3	6.0		4.3	8.0	mA
Quiescent Current Change	with line	15 V (14.5 V for 7812C) ≤ V_{IN} ≤ 30 V				0.8			1.0	mA
	with load	5.0 mA ≤ I_{OUT} ≤ 1.0 A				0.5			0.5	mA
Output Noise Voltage		T_A = 25°C, 10 Hz ≤ f ≤ 100 kHz			75			75		μA
Long Term Stability						48			48	mA
Ripple Rejection		f = 120 Hz, 15 V ≤ V_{IN} ≤ 25 V		61	71		55	71		dB
Dropout Voltage		I_{OUT} = 1.0 A, T_J = 25°C			2.0			2.0		V
Output Resistance		f = 1.0 kHz			18			18		mΩ
Short Circuit Current		T_J = 25°C			350			350		mA
Peak Output Current		T_J = 25°C			2.2			2.2		A
Average TC of Output Voltage		I_{OUT} = 5.0 mA, 0°C ≤ T_J ≤ 150°C (7812)			−1.0					mV/°C
		I_{OUT} = 5.0 mA, 0°C ≤ T_J ≤ 125°C (7812C)						−1.0		mV/°C

ELECTRICAL CHARACTERISTICS

V_{IN} = 23 V, I_{OUT} = 500 mA, −55°C ≤ T_J ≤ 150°C (7815) 0°C ≤ T_J ≤ 125°C (7815C) unless otherwise specified

PARAMETER	CONDITIONS		7815			7815C			UNITS
			MIN	TYP	MAX	MIN	TYP	MAX	
Output Voltage	T_J = 25°C		14.4	15	15.6	14.4	15	15.6	V
Line Regulation	T_J = 25°C	17.5 V ≤ V_{IN} ≤ 30 V		11	150		11	300	mV
		20 V ≤ V_{IN} ≤ 26 V		3.0	75		3.0	150	mV
Load Regulation	T_J = 25°C	5.0 mA ≤ I_{OUT} ≤ 1.5 A		12	150		12	150	mV
		250 mA ≤ I_{OUT} ≤ 750 mA		4.0	75		4.0	75	mV
Output Voltage	18.5 V (17.5 V for 7815 C) ≤ V_{IN} ≤ 30 V 5.0 mA ≤ I_{OUT} ≤ 1.0 A P ≤ 15 W		14.25		15.75	14.25		15.75	V
Quiescent Current	T_J = 25°C			4.4	6.0		4.4	8.0	mA
Quiescent Current Change	with line	18.5 V (17.5 V for 7815C) ≤ V_{IN} ≤ 30 V			0.8			1.0	mA
	with load	5.0 mA ≤ I_{OUT} ≤ 1.0 A			0.5			0.5	mA
Output Noise Voltage	T_A = 25°C, 10 Hz ≤ f ≤ 100 kHz			90			90		μV
Long Term Stability					60			60	mV
Ripple Rejection	f = 120 Hz, 18.5 V ≤ V_{IN} ≤ 28.5 V		60	70		54	70		dB
Dropout Voltage	I_{OUT} = 1.0 A, T_J = 25°C			2.0			2.0		V
Output Resistance	f = 1.0 kHz			19			19		mΩ
Short Circuit Current	T_J = 25°C			230			230		mA
Peak Output Current	T_J = 25°C			2.1			2.1		A
Average TC of Output Voltage	I_{OUT} = 5.0 mA, 0°C ≤ T_J ≤ 150°C (7815)			−1.0					mV/°C
	I_{OUT} = 5.0 mA, 0°C ≤ T_J ≤ 125°C (7815C)						−1.0		mV/°C

ELECTRICAL CHARACTERISTICS

V_{IN} = 27 V, I_{OUT} = 500 mA, −55°C ≤ T_J ≤ 150°C (7818) 0°C ≤ T_J ≤ 125°C (7818C) unless otherwise specified

PARAMETER	CONDITIONS		7818			7818C			UNITS
			MIN	TYP	MAX	MIN	TYP	MAX	
Output Voltage	T_J = 25°C		17.3	18	18.7	17.3	18	18.7	V
Line Regulation	T_J = 25°C	21 V ≤ V_{IN} ≤ 33 V		15	180		15	360	mV
		24 V ≤ V_{IN} ≤ 30 V		5.0	90		5.0	180	mV
Load Regulation	T_J = 25°C	5.0 mA ≤ I_{OUT} ≤ 1.5 A		12	180		12	360	mV
		250 mA ≤ I_{OUT} ≤ 750 mA		4.0	90		4.0	180	mV
Output Voltage	22 V (21 V for 7818C) ≤ V_{IN} ≤ 33 V 5.0 mA ≤ I_{OUT} ≤ 1.0 A P ≤ 15 W		17.1		18.9	17.1		18.9	V
Quiescent Current	T_J = 25°C			4.5	6.0		4.5	8.0	mA
Quiescent Current Change	with line	22 V (21 V for 7818 C) ≤ V_{IN} ≤ 33 V			0.8			1.0	mA
	with load	5.0 mA ≤ I_{OUT} ≤ 1.0 A			0.5			0.5	mA
Output Noise Voltage	T_A = 25°C, 10 Hz ≤ f ≤ 100 kHz			110			110		μA
Long Term Stability					72			72	mV
Ripple Rejection	f = 120 Hz, 22 V ≤ V_{IN} ≤ 32 V		59	69		53	69		dB
Dropout Voltage	I_{OUT} = 1.0 A, T_J = 25°C			2.0			2.0		V
Output Resistance	f = 1.0 kHz			22			22		mΩ
Short Circuit Current	T_J = 25°C			200			200		mA
Peak Output Current	T_J = 25°C			2.1			2.1		A
Average TC of Output Voltage	I_{OUT} = 5.0 mA, 0°C ≤ T_J ≤ 150°C (7818)			−1.0					mV/°C
	I_{OUT} = 5.0 mA, 0°C ≤ T_J ≤ 125°C (7818C)						−1.0		mV/°C

ELECTRICAL CHARACTERISTICS

V_{IN} = 33 V, I_{OUT} = 500 mA, −55°C ≤ T_J ≤ 150°C (7824) 0°C ≤ T_J ≤ 125°C (7824C) unless otherwise specified

PARAMETER		CONDITIONS		7824			7824C			UNITS
				MIN	TYP	MAX	MIN	TYP	MAX	
Output Voltage		T_J = 25°C		23	24	25	23	24	25	V
Line Regulation		T_J = 25°C	27 V ≤ V_{IN} ≤ 38 V		18	240		18	480	mV
			30 V ≤ V_{IN} ≤ 36 V		6.0	120		6.0	240	mV
Load Regulation		T_J = 25°C	5.0 mA ≤ I_{OUT} ≤ 1.5 A		12	240		12	480	mV
			250 mA ≤ I_{OUT} ≤ 750 mA		4.0	120		4.0	240	mV
Output Voltage		28 V (27 V for 7824C) ≤ V_{IN} ≤ 38 V 5.0 mA ≤ I_{OUT} ≤ 1.0 A P ≤ 15 W		22.8		25.2	22.8		25.2	V
Quiescent Current		T_J = 25°C			4.6	6.0		4.6	8.0	mA
Quiescent Current Change	with line	28 V (27 V for 7824C) ≤ V_{IN} ≤ 38 V				0.8			1.0	mA
	with load	5.0 mA ≤ I_{OUT} ≤ 1.0 A				0.5			0.5	mA
Output Noise Voltage		T_A = 25°C, 10 Hz ≤ f ≤ 100 kHz			170			170		μV
Long Term Stability						96			96	mV
Ripple Rejection		f = 120 Hz, 28 V ≤ V_{IN} ≤ 38 V		56	66		50	66		dB
Dropout Voltage		I_{OUT} = 1.0 A, T_J = 25°C			2.0			2.0		V
Output Resistance		f = 1.0 kHz			28			28		mΩ
Short Circuit Current		T_J = 25°C			150			150		mA
Peak Output Current		T_J = 25°C			2.1			2.1		A
Average TC of Output Voltage		I_{OUT} = 5.0 mA, 0°C ≤ T_J ≤ 150°C (7824)			−1.5					mV/°C
		I_{OUT} = 5.0 mA, 0°C ≤ T_J ≤ 125°C (7824C)						−1.5		mV/°C

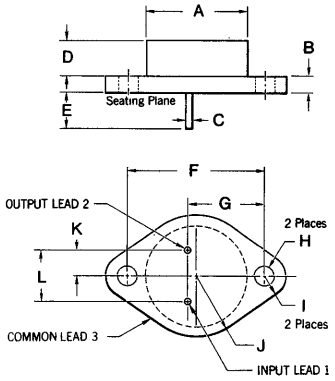

NOTES:
Leads 1 and 2 electrically isolated from case
Case is electrically connected to common
Leads are gold-plated copper cored kovar
Package weight is 7.4 grams

	INCHES		MILLIMETERS	
DIM	MIN	MAX	MIN	MAX
A	0.805	0.835	20.45	31.21
B		0.135		3.43
C	0.038	0.048	0.965	1.12
D	0.205	0.325	5.20	8.25
E	0.312		7.92	
F	1.177	1.197	29.90	30.40
G	0.655	0.675	16.64	17.15
H	0.151	0.161	3.79	3.84
I		0.188		4.78
J		0.525		13.34
K	0.205	0.225	5.20	5.71
L	0.420	0.440	9.67	10.08

Fig. 2-7 JEDEC TO-3

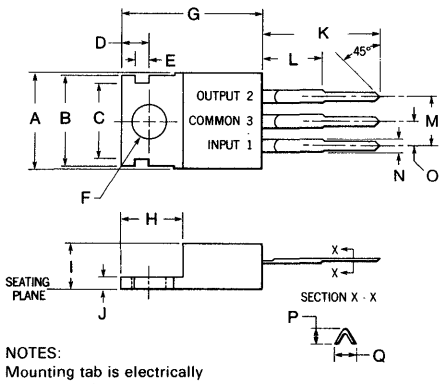

NOTES:
Mounting tab is electrically connected to common
Package is molded with nickel-plated copper tab and leads
Package weight is 2.1 grams

	INCHES		MILLIMETERS	
DIM	MIN	MAX	MIN	MAX
A	0.395	0.410	10.03	10.41
B	0.365	0.385	9.27	9.77
C	0.300	0.320	7.62	8.13
D	0.100	0.120	2.54	3.05
E	0.040	0.060	1.02	1.52
F	0.141	0.145	3.58	3.68
G	0.575	0.600	14.6	15.24
H	0.235	0.265	5.97	6.73
I	0.160	0.190	4.06	4.83
J	0.020	0.055	0.508	1.40
K	0.500		12.70	
L		0.250		6.35
M	0.190	0.210	4.83	5.33
N	0.045	0.055	1.05	1.40
O	0.095	0.105	2.41	2.66
P	0.015	0.030	0.381	0.762
Q	0.020	0.045	0.508	1.43

Fig. 2-8 JEDEC TO-220

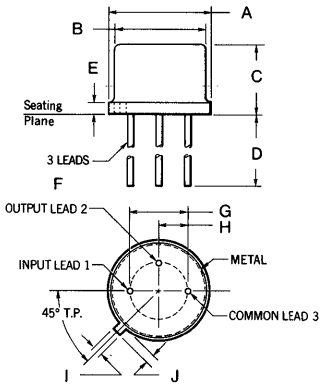

NOTES:
Leads are gold-plated over nickel-flash on steel
Lead 3 connected to case
Low thermal resistance
Package weight is 0.76 gram

	INCHES			MILLIMETERS		
DIM	MIN	TYP	MAX	MIN	TYP	MAX
A	0.350		0.370	8.51		9.39
B	0.315		0.335	8.00		8.51
C	0.240		0.260	6.10		6.60
D	0.500			12.70		
E			0.030			0.762
F	0.016		0.019	0.406		0.483
G		0.200			5.08	
H		0.100			2.54	
I	0.28		0.034	0.711		0.864
J	0.029		0.040	0.737		1.02

Fig. 2-9 JEDEC TO-39

	OUTPUT VOLTAGE	TO-3 TYPE	TO-3 PART NO.	TO-3 TYPE	TO-3 PART NO.	TO-220 TYPE	TO-220 PART NO.
7800/7800C	5 V	7805	7805KM	7805C	7805KC	7805C	7805UC
	6 V	7806	7806KM	7806C	7806KC	7806C	7806UC
	8 V	7808	7808KM	7808C	7808KC	7808C	7808UC
	12 V	7812	7812KM	7812C	7812KC	7812C	7812UC
	15 V	7815	7815KM	7815C	7815KC	7815C	7815UC
	18 V	7818	7818KM	7818C	7818KC	7818C	7818UC
	24 V	7824	7824KM	7824C	7824KC	7824C	7824UC

Fig. 2-10 Ordering Information

	OUTPUT VOLTAGE	TO-39 TYPE	TO-39 PART NO.	TO-39 TYPE	TO-39 PART NO.	TO-220 TYPE	TO-220 PART NO.
78M00/78M00C	5 V	78M05	78M05HM	78M05C	78M05HC	78M05C	78M05UC
	6 V	78M06	78M06HM	78M06C	78M06HC	78M06C	78M06UC
	8 V	78M08	78M08HM	78M08C	78M08HC	78M08C	78M08UC
	12 V	78M12	78M12HM	78M12C	78M12HC	78M12C	78M12UC
	15 V	78M15	78M15HM	78M15C	78M15HC	78M15C	78M15UC
	20 V	78M20	78M20HM	78M20C	78M20HC	78M20C	78M20UC
	24 V	78M24	78M24HM	78M24C	78M24HC	78M24C	78M24UC

Fig. 2-11 Ordering Information

NOTE: For more detailed information on the 78M00 Series Voltage Regulators — refer to the 78M00 Data Sheet.