Chapter 1
IC VOLTAGE REGULATORS

IC regulators have eliminated the tedious and repetitive task of designing power supply circuits. Today, the designer has a wide choice of fixed or adjustable series-type regulators with either positive or negative output voltages from 2.6 to 30 V and current capabilities from 10 mA to 2 A, as well as an increasing number of switching regulators. Built-in protection circuits improve reliability and make IC regulators virtually immune to failure modes normally encountered when dealing with discrete voltage regulators. This chapter describes the internal circuit features of series-type regulators and the circuit description of the various series regulators offered by Fairchild followed by switching regulator theory and a description of the 78S40 switching regulator.

INTERNAL CIRCUIT FEATURES

Figure 1-1 shows a block diagram of a typical series-type IC voltage regulator in which an error amplifier compares a reference voltage V_{REF} with a fraction of the output voltage derived from the feedback resistors R_A and R_B. The error amplifier provides the necessary base drive to the series-pass element to maintain a constant output voltage level regardless of changes in input voltage or output current levels.

To assure a stable reference immune to line voltage and temperature variations, the voltage reference is usually fed from a constant current source. If the current source is not self-starting, some type of start-up circuit must be used. In addition to these basic blocks, most regulators have protection circuits to guard against accidental shorts, excessive input-output differentials and thermal overloads.

Voltage Reference Circuit

The voltage reference is the most important part of the regulator since any abnormality observed in the reference will also be seen at the output. Therefore, it must be stable, free of noise, and must have a low temperature drift. It should also be reproducible with little variation in absolute value from device to device. Zener reference and band-gap or differential V_{BE} are the most widely used references in regulators with the band-gap type the less noisy of the two.

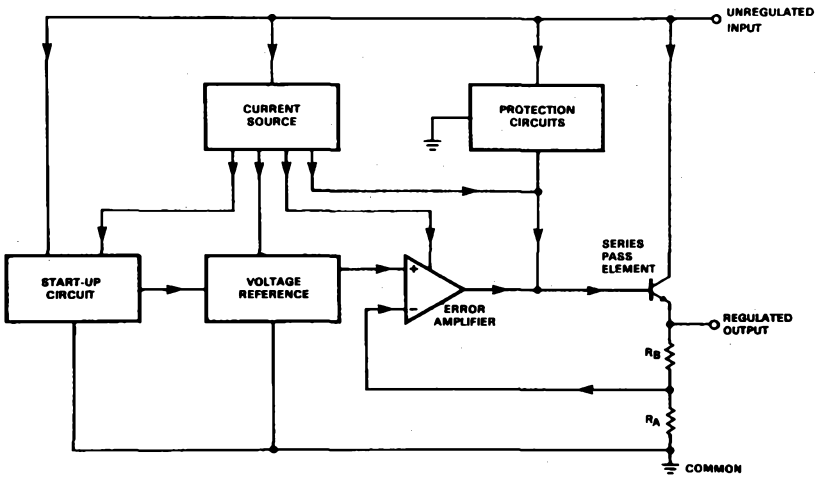

Fig. 1-1 Block Diagram of a Series-Type Voltage Regulator

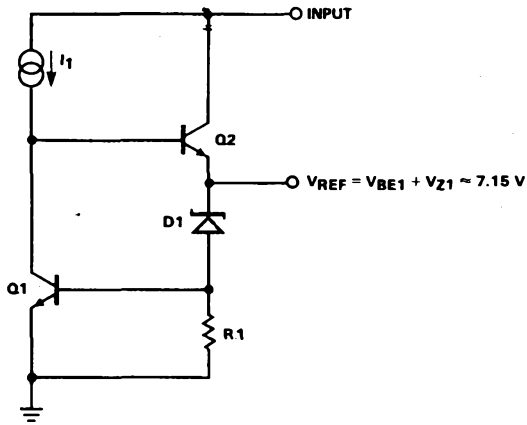

Fig. 1-2 μA723 Reference

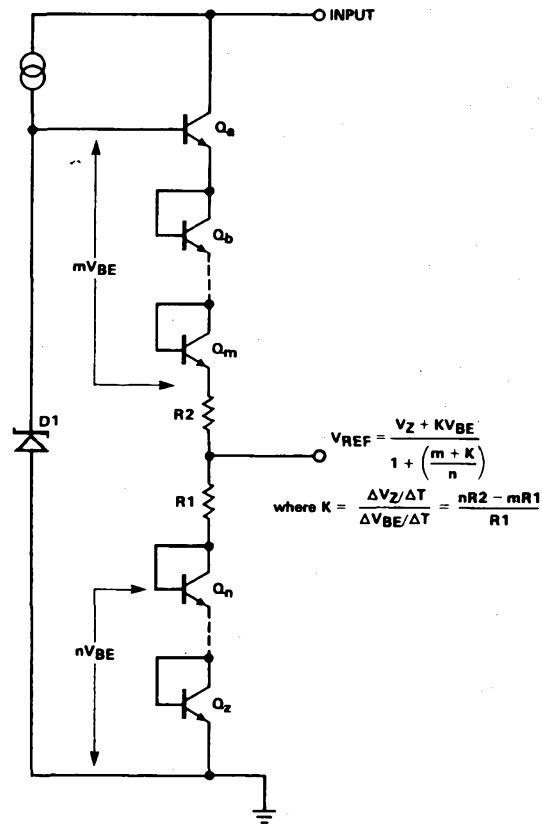

Fig. 1-3 Zener Voltage Reference Compensation Technique Using Several Base-Emitter Diodes

Zener References

The μA723, the μA78C00 series, the negative series μA7900 regulators as well as the μA104/105 have Zener voltage reference elements. There are various ways of obtaining the required temperature stability but the basic principles are the same. The technique is to compensate the positive temperature coefficient of a Zener diode with the negative coefficient of a base-emitter diode or diodes.

Figure 1-2 shows the voltage reference used in the μA723 regulator. The current through the Zener diode D1 is set by resistor R1. The temperature coefficient of the Q1 base-emitter voltage V_{BE1} is determined by Q1 collector current, which is set by the current source I_1. The lower the value of I_1 the higher the temperature coefficient of V_{BE1}. Therefore, I_1 is set to cancel the positive temperature coefficient of D1, thus yielding a nominal reference of about 7.15 V.

Another Zener-derived reference is shown in *Figure 1-3*. Here, temperature compensation is achieved via a string of diodes; m represents the number of diodes in the top portion of the circuit and n represents the number in the bottom portion. The junction of R2 and transistor Qm has a positive temperature coefficient, while the junction of R1 and Qn has a negative temperature coefficient. The reference point V_{REF} is selected to give a temperature stable reference.

$$V_{REF} = [\, V_Z - (m\, V_{BE} + n\, V_{BE}) \,] \frac{R1}{R1 + R2} + n\, V_{BE} \quad (1\text{-}1)$$

And simplifying

$$V_{REF} = \frac{R1\, V_Z + (n\, R2 - m\, R1)\, V_{BE}}{R1 + R2} \quad (1\text{-}2)$$

For a temperature stable reference

$$\frac{\Delta V_{REF}}{\Delta T} = 0$$

Assuming resistors R1 and R2 have the same temperature coefficient

$$\frac{\Delta V_{REF}}{\Delta T} = \frac{R1 + (n\, R2 - m\, R1)}{R1 + R2} \quad (1\text{-}3)$$

To achieve a stable reference, therefore

$$R1 \frac{\Delta V_Z}{\Delta T} = -(n\, R2 - m\, R1) \frac{\Delta V_{BE}}{\Delta T} \quad (1\text{-}4)$$

or

$$\frac{R1}{R2} = \frac{n}{m + K} \quad (1\text{-}5)$$

where

$$K = \frac{-\dfrac{\Delta V_Z}{\Delta T}}{\dfrac{\Delta V_{BE}}{\Delta T}} = \frac{n\, R2 - m\, R1}{R1} \quad (1\text{-}6)$$

Substituting these values of K and $\frac{R1}{R2}$ in *Equation 1-2*

$$V_{REF} = \frac{V_Z + K V_{BE}}{1 + \dfrac{(m + K)}{n}} \quad (1\text{-}7)$$

Both of these Zener-derived voltage references offer some advantages. The circuit in *Figure 1-2* provides a higher reference voltage, approximately 7.15 V, which is buffered. Therefore, the user can draw some current out of the reference terminal without appreciably affecting the reference. The circuit in *Figure 1-3* is more complex but it offers a wide range of low voltage references. This reference has a high output impedance since it is not buffered, therefore no current can be drawn out without degrading the regulator.

Band-Gap References

Each of the μA7800, μA78M and μA78L positive regulators has a band-gap voltage reference derived from the predictable temperature, current and voltage relationship in a base-emitter junction. To obtain a temperature-compensated reference voltage, the positive temperature coefficient of the emitter-base voltage differential between two transistors, operated at different current densities, is added to the negative temperature coefficient of the emitter-base voltage (see *Figure 1-4a*). Transistor Q1 operates at a considerably higher current density than Q2. The base-emitter differential voltage ΔV_{BE} appears across R3. Transistor Q2 is a gain stage and thus develops a voltage drop across R2 that is proportional to the drop

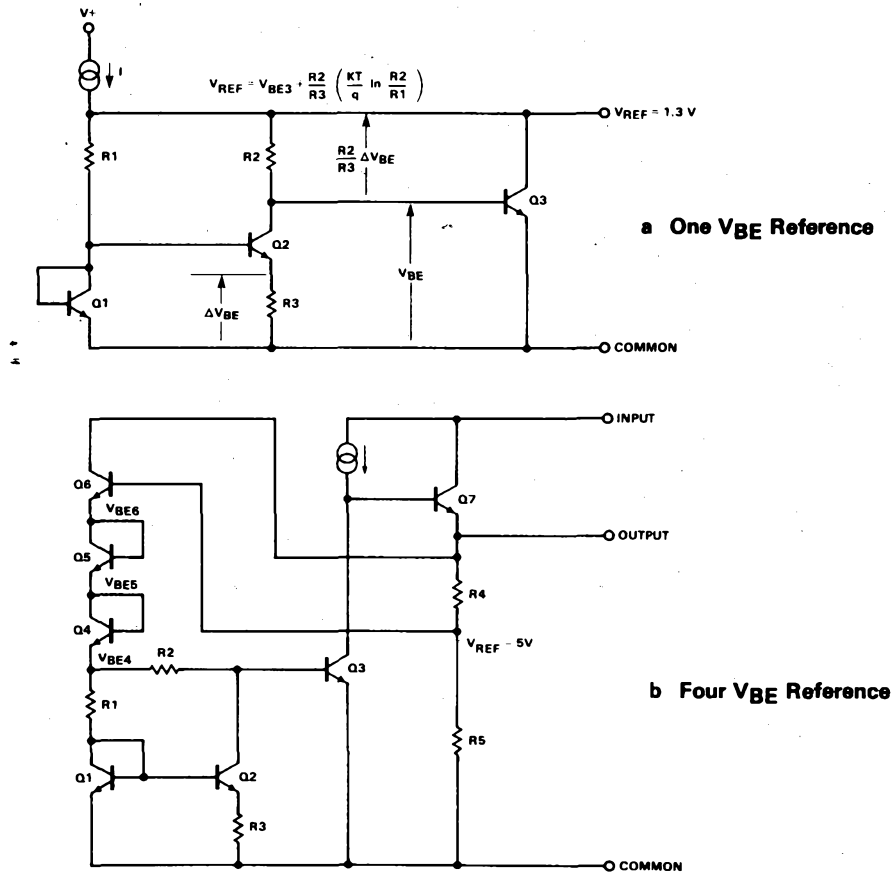

Fig. 1-4 Band-gap or Differential V_{BE} Voltage References

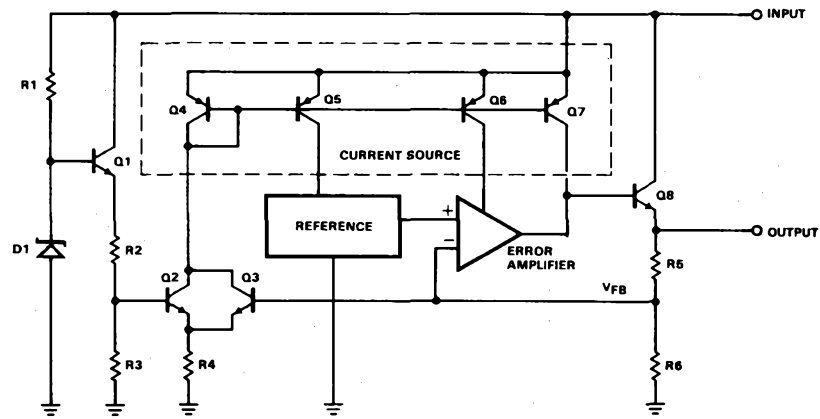

Fig. 1-5 Typical Regulator Start-Up Circuit

across R3. Transistor Q3 provides additional gain and adjusts the reference voltage V_{REF} to a value equal to the Q3 base-emitter drop plus the voltage across R2. The reference voltage can thus be expressed as

$$V_{REF} = V_{BE3} + V_{R2} = V_{BE3} + \frac{R2}{R3}\Delta V_{BE} + I_{B3}\,R2 \qquad (1\text{-}8)$$

Neglecting the drop due to the Q3 base current

$$V_{REF} \cong V_{BE3} + \frac{R2}{R3}\,\frac{kT}{q}\ln\frac{J1}{J2} \qquad (1\text{-}9)$$

where J = Current density; T = ° Kelvin; k = Boltzmann constant; q = Electron Charge

To obtain a temperature stable reference, $\Delta V_{REF}/\Delta T$ must be set to zero, or

$$\frac{\Delta V_{REF}}{\Delta T} = \frac{\Delta V_{BE3}}{\Delta T} + \frac{R2}{R3}\,\frac{k}{q}\ln\frac{J1}{J2} = 0 \qquad (1\text{-}10)$$

Assuming $V_{BE1} = V_{BE3}$, the following must be satisfied

$$\frac{\Delta V_{BE3}}{\Delta T} = -\frac{R2}{R3}\,\frac{k}{q}\ln\frac{J1}{J2} = -\frac{R2}{R3}\,\frac{k}{q}\ln\frac{R2}{R1} \qquad (1\text{-}11)$$

where $\Delta V3_{BE3}/\Delta T$ is the negative temperature coefficient of the Q3 base-emitter voltage, k/q ln J1/J2 is the positive temperature coefficient of the base-emitter differential voltage of Q1 and Q2.

Therefore, by selecting the resistor ratios R2/R3 and R2/R1, a temperature compensated reference of about 1.3 V is obtained. This reference is used in the μA78L00-series regulators.

To obtain a higher voltage reference, additional diodes can be added in series as shown in *Figure 1-4b*. The reference then becomes:

$$V_{REF} = V_{BE3} + V_{BE4} + V_{BE5} + V_{BE6} + \frac{R2}{R3}\,\frac{kT}{q}\ln\frac{R2}{R1} \qquad (1\text{-}12)$$

Resistors R1, R2 and R3 are selected so that the reference voltage is constant over the temperature range and also has a nominal value of 5 V at room temperature. This reference is used in the μA7800/78M00-series positive regulators.

Current Sources

Stable current sources can easily be realized in monolithic circuits by taking advantage of the good matching and tracking capability of monolithic components. Also, the IC designer can add as many active devices as necessary without significantly increasing die area. A variety of current sources can be designed by scaling emitter areas, thus removing much of the dependence on absolute resistor values.

Operation of the reference circuit at a constant current level reduces fluctuations due to line-voltage variations in the reference voltage and therefore in the output. The error amplifier is operated at a constant current to reduce line-voltage induced errors or offsets at the output. The drive for the output stage is also made constant to insure device operation over the intended line voltage and temperature ranges. In addition, the use of constant currents throughout the regulator causes the quiescent current to remain relatively constant with line voltage and temperature variations.

Start-up Circuit

Certain current sources in regulator circuits are derived from the regulated output and, as a result, are not self-starting. They, therefore, require some additional circuits to initiate and maintain the flow of cur-

rent independent of output conditions. *Figure 1-5* shows a typical start-up circuit. Zener diode D1 and the emitter-follower transistor Q1 provide a fixed voltage at the base of Q2 through the divider network of R2 and R3. When power is first applied to the circuit, collector and base currents of Q4 flow through Q2. Once Q4 conducts, Q5, Q6 and Q7 also conduct and a regulated output is obtained. Normally, the bias at the base of Q2 is set to a level lower than the reference voltage. Thus, when a regulated output is obtained, Q3 turns on and Q2 turns off, diverting the collector and base currents of Q4 through the Q3 collector. The feedback voltage V_{FB}, the base-emitter voltage of Q3, and R4 set the pnp current sources Q4, Q5, Q6 and Q7.

Protection Circuits

Protective circuits are added on chip to improve reliability and to make regulators immune to certain types of overloads. They protect the regulators against short circuit conditions (current limit), against excessive input-output voltage differential conditions (safe area limit) and against excessive junction temperatures (thermal limit).

Current Limit or Short-Circuit Protection

The most commonly used protection scheme is current limiting for guarding the output series-pass transistor against excessive output currents or short circuit conditions (see *Figure 1-6*). With low input-output conditions when Zener diode D1 is not conducting, there is no current flowing through R1. The current limiting transistor Q2, then, senses the voltage drop across the current limiting resistor R3. As the output current increases, the drop across R3 increases; and, as a result, the Q2 base-emitter voltage increases until Q2 begins to conduct thereby removing the base drive of the series-pass transistor Q1. No additional output current can be pulled out since any increase in the output current will cause Q2 to conduct harder. This current-limit circuit has a slight disadvantage, *i.e.,* the voltage developed across R3 adds to the regulator drop-out voltage and degrades the load regulation and output impedance.

A simple way of getting around this problem is to pre-bias the base of the current-limit transistor Q2 with a fraction of the base-emitter voltage of the series-pass transistor Q1 via R6 and R7 as shown in *Figures 1-7a* and *b*. In these three current-limit schemes, the output current decreases with increasing temperature since the base-emitter voltage of the current-limit transistor Q2 is the threshold for preventing the flow of additional regulator output current.

Temperature-independent short-circuit current can be achieved with a slight increase in circuit complexity. *Figure 1-7c* shows the circuit used in the μA79M00-series negative regulators to obtain temperature independent peak output current. At low to medium output current levels, Q4 is on and Q5 and Q6 are off. When the voltage drop across R3 reaches a predetermined level, Q4 begins to turn off and current is diverted to Q5, which in turn causes Q6 to turn on. Q1 and consequently Q2 base currents are thus diverted and the output current is prevented from increasing any further. By proper choice of R1:R2 and emitter area ratio of Q4 and Q5, the peak current is set to be independent of temperature.

Safe Operating Area (SOA) Protection*

Safe area protection is included in IC regulators to protect the series-pass transistor against excessive power dissipation by reducing the collector current as the collector-emitter voltage is increased (*Figure 1-6*). When the input-output voltage differential exceeds the breakdown voltage differential of Zener diode D1, current flows from the input to the output through D1, R1, R2 and R3. The voltage drop across R3 and, therefore, the Q2 base voltage become a function of not only the output current but also the input-output voltage differential. Hence, maximum output current is available when the input-output voltage differential is less than the D1 breakdown voltage. The safe area protection network reduces the available output current I_{OUT} as the input-output differential $\Delta(V_{IN}-V_{OUT})$ increases at a rate determined by

$$\frac{\Delta I_{OUT}}{\Delta(V_{IN} - V_{OUT})} = -\frac{R2}{R1\ R3} \qquad (1\text{-}13)$$

*See Chapter 5

The safe area protection network thus reduces the available output current as the input-output differential increases and limits the regulator operation to within the safe operating area of the series-pass transistor. Note that the safe area protection network is lumped in with the short circuit protection network and consequently both have the same temperature characteristics.

When selecting a regulator to operate with high input voltage or with high input-output voltage differential, it must be remembered that output current *decreases* with *increased* input-output voltage differential. Under heavy load and high input-voltage conditions, the safe area protection circuit may cause a high

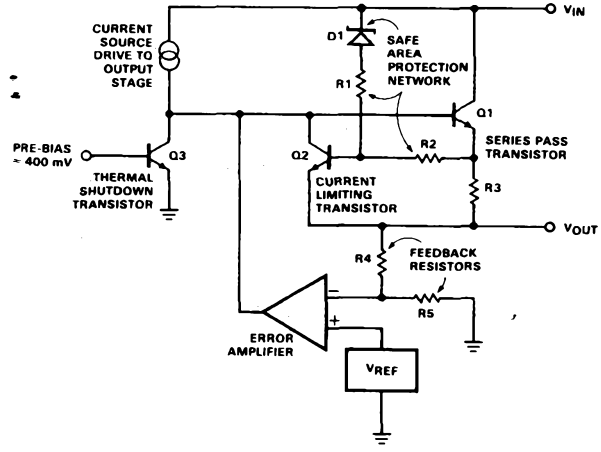

Fig. 1-6 Basic Regulator Protection Circuit

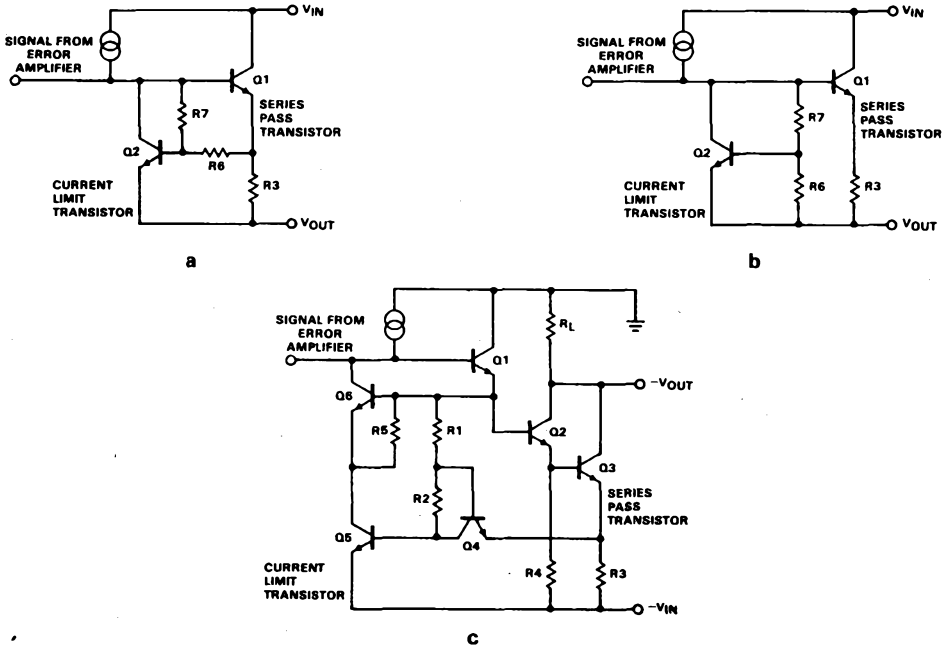

Fig. 1-7 Alternate Current Limit Circuits

output voltage device to latch up after a momentary short, since the input voltage becomes the input-output differential during the short. The regulator may not be able to supply as much current after the fault condition as before. Latching will not damage the regulator; interrupting the power, reducing the load current or the input voltage momentarily will restore normal operation.

Thermal Overload Protection

A discrete regulator usually relies on current limiting for overload protection since there is no practical way to sense junction temperature in a separate series-pass transistor. The dominant failure mechanism of this type of regulator, then, is excessive heating of the series-pass transistor. In a monolithic regulator, the series-pass transistor is contained within the thermal overload-protection circuit where its maximum junction temperature is limited, independent of input voltage, type of overload or degree of package heat sinking. It is, therefore, considerably more effective than current limiting by itself. An added bonus to combined thermal and current overload protection is that a higher output current level under normal conditions can be considered, since there is no excessive regulator heating when a load fault occurs.

The base-emitter junction of a transistor placed as close as practical to the series-pass transistor is used to sense the chip temperature. The thermal shutdown transistor Q3 in *Figure 1-6* is normally biased below its activation threshold so that it does not affect normal operation of the circuit. However, if the chip temperature rises above its maximum limit due to an overload, inadequate heat sinking or other condition, the thermal shutdown transistor turns on, removing the base drive to the output transistor Q1 and shutting down the regulator to prevent any further chip heating.

Error Amplifier

The error amplifier in a regulator can be a simple gain stage or can consist of several amplifier stages depending on the regulator performance. It is an operational amplifier used in a negative feedback mode where the reference is connected to the non-inverting input while the feedback signal from the regulated output is divided down through a pair of feedback resistors (R4 and R5 in *Figure 1-6*). The output voltage in this type of feedback configuration is

$$V_{OUT} = V_{REF} \frac{A}{\beta (1 + A)}$$

where A is the amplifier gain and β is the fraction of the output feedback or $\beta = \frac{R5}{R4+R5}$

Improved line and load regulation in regulators results from higher gain. As the amplifier gain is increased, the output impedance drops and the regulator performance improves. Since the error amplifier has a high gain, the output voltage equation can be written as follows.

$$V_{OUT} = \frac{V_{REF}}{\beta} = V_{REF} \frac{R4 + R5}{R5}$$

It is obvious that the lowest output voltage possible with this configuration is when R4 = 0 which results when $V_{OUT} = V_{REF}$ (unity gain). To obtain a wide range of regulated output voltage, then, a low value of V_{REF} is an advantage. However, to obtain a high output voltage from a low reference, the feedback ratio β must be low (in other words, high value of R4). As the loop gain decreases the regulator performance degrades, affecting such parameters as line and load regulation and output impedance.

The error amplifier, like an op amp, requires some compensation for stability. Most regulators have on-chip compensation and, depending on the type or the application, may require additional external compensation. Excessive compensation, however, causes the error amplifier gain to fall off at high frequencies, thus deteriorating regulator performance.

Series-Pass Element

The maximum input voltage and the maximum output current of the regulator determine the size of the series-pass transistor. In the higher output current devices, such as the μA7800 and the μA7900 series, the output transistor and its metallization pattern occupy nearly half of the die area.

One of the benefits of including the series-pass transistor on the chip is that the integrated circuit needs only three terminals, hence, an ordinary transistor power package can be used. Another important advantage is that thermal as well as current overload protection can be incorporated on the chip in close proximity to the series-pass device.

CIRCUIT DESCRIPTIONS OF SERIES REGULATORS

Certain portions of the various regulator circuits are common to one group within the regulator family. For instance, the μA7800 and the μA78M00 series are identical except for their series-pass transistors. The 4-terminal adjustable regulators are identical to their 3-terminal counterparts (the μA78G and μA7800, μA79G and μA7900, etc.) except for the feedback resistors. The following descriptions of the various regulator circuits, fixed-voltage devices followed by the adjustable types, are arbitrarily arranged in order of increasing device terminals. The positive versions are followed by the negative counterparts. A selection guide and short form data are provided in Chapter 2.

Positive 3-Terminal Regulators

The positive 3-terminal regulators cover the largest range of output current, from 100 mA to 5 A, output voltages from 2.6 to 24 V, and are available in a variety of packages.

μA78L00 Series

The μA78L00 series is the simplest of the 3-terminal regulators (*Figure 1-8*). It is capable of delivering 100 mA output current and is available in nine output voltages ranging from 2.6 to 24 V and two popular packages, metal TO-39 and plastic TO-92. The start-up circuit, comprised of Zener diode D1, transistor Q10 and resistors R14, R15, R16, provides a bias level that is less than the reference at the Q11 base. Collector and base currents of Q6 flow through Q11 at the instant the power is turned on. When the device reaches regulation, the reference causes Q8 to turn on thereby diverting the current from Q11.

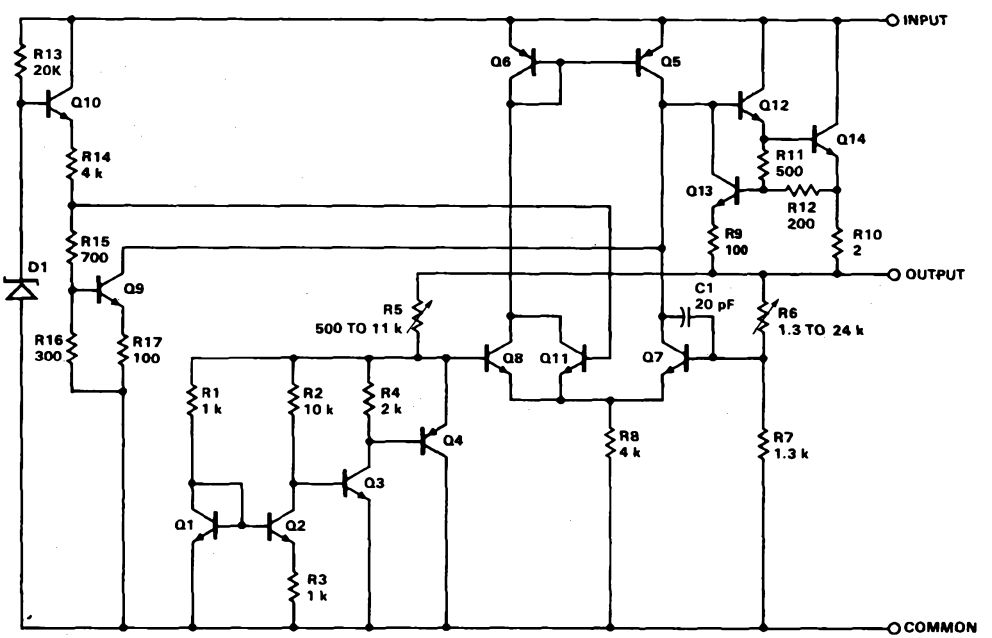

Fig. 1-8 μA78L00 Equivalent Circuit

The output voltage also provides a constant current of about 2 mA to the reference through resistor R5. The voltage reference is a band-gap type with a nominal value of 1.3 V consisting of Q1 through Q4 and R1 through R4. The error amplifier is a differential pair consisting of Q7 and Q8 with active pnp loads, Q5 and Q6, for high gain. The current through the error amplifier is set by the reference voltage, the base-emitter drop of Q8, and R8. The feedback resistors, R6 and R7, determine the output voltage.

Capacitor C1 is included on the chip for stability. The output stage uses a Darlington consisting of Q12 and Q14. Thermal-shutdown transistor Q9, which is physically placed near Q14, is pre-biased from the start-up circuit at approximately 400 mV at 25°C and limits the chip temperature to a safe value under overload conditions. Short-circuit protection is achieved by Q13 which is pre-biased by a fraction of the base-emitter voltage of the series-pass transistor. It should be noted that the μA78L00 series does not need safe-area protection because the series-pass transistor is designed to handle the short circuit current at the maximum input voltage. This may appear as an overdesign but, when dealing with current levels this low, the die area needed to include safe area protection would be greater than the area used to overdesign the series-pass transistor.

μA78C00 Series

The μA78C00 series is a low cost regulator intended mainly for consumer applications. It is capable of delivering 0.5 A current and is available in popular output voltages to 24 V in the Power Watt package, (similar to TO-202). *Figure 1-9* shows the equivalent circuit of the μA78C00 regulator. The reference is derived from Zener diode D1 and compensated by the base-emitter voltage of the error amplifier Q4. Additional gain is provided by Q7 and Q8 to the Darlington-connected emitter-follower output stage of Q10 and Q11. The output stage is compensated by capacitor C1. A positive start-up condition is ensured by FET transistor Q1 to provide base current to transistors Q2 and Q5. Q2 Q5 and Q6 then form a positive feedback loop which raises the base voltage of Q2 until the reference Zener D1 conducts. Thermal overload protection is achieved by transistor Q3. The bias to the base-emitter voltage of Q3 is derived from D1 via Q2 and the divider network of R1 and R2. At high junction temperatures, Q3 turns on and removes the drive to the output stage. Current limit transistor Q9 protects the device against accidental shorts by sensing the voltage drop across R7 while Zener diode D2 along with Q9 and resistors R5, R6, and R7 limit the power dissipation to a safe value.

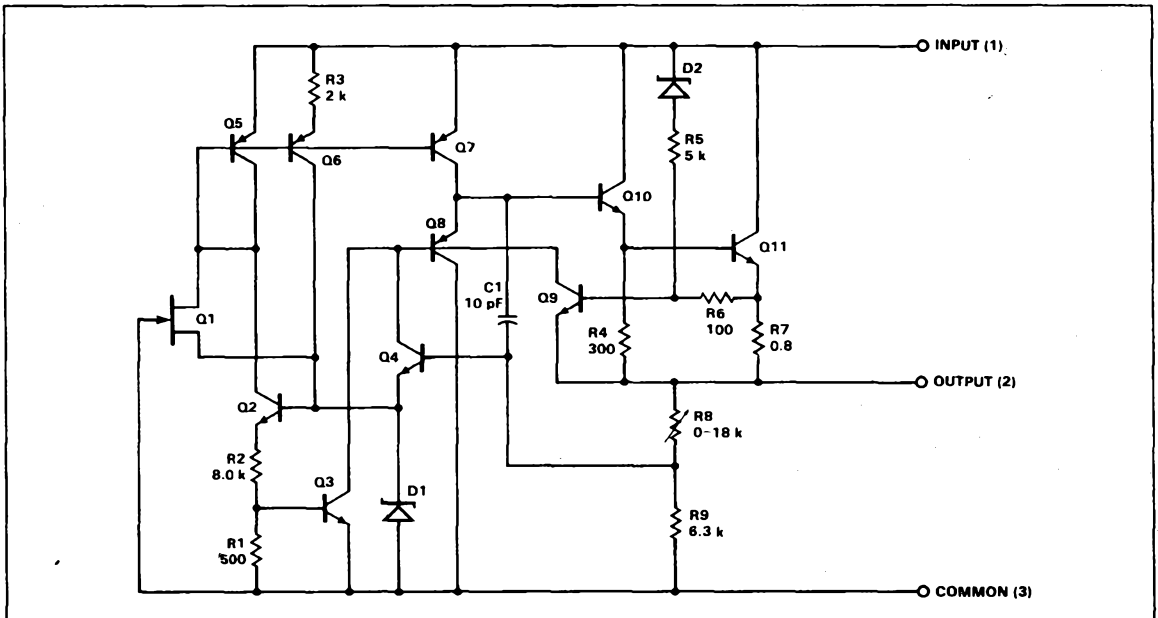

Fig. 1-9 μA78C00 Equivalent Circuit

μA78M00/μA7800 Series

The μA78M00 and the μA7800 regulators are schematically identical (*Figure 1-10*); they differ only in maximum current capability, 0.5 A and 1 A respectively. Component value differences (R9, R11, R16) are shown with the μA7800 value in parenthesis. Transistors Q1 through Q7 and their associated resistors constitute a temperature compensated reference of 5 V. The Darlington configuration, Q3 and Q4, is the error amplifier lumped into the voltage reference. The error amplifier gain is increased by the pnp transistor Q11 which acts as a buffer to drive the active collector load formed by the pnp current-source transistor pair, Q8 and Q9.

The current through Q8 and Q9 is set up by the current through resistor R1. During regulator turn on, the current in R1 flows first through transistor Q13, part of the start-up circuit containing Zener diode D1, transistors Q12 and Q13, and resistors R5, R6 and R7. After the device is in regulation, Q13 is biased off and the regulator takes over setting the current in R1, which then flows through Q5 and Q10.

Thermal protection is provided by transistor Q14 with the base clamped by the resistive divider string, R5, R6 and R7, in the start-up circuit. At a junction temperature of about 175°C, Q14 turns on and removes the base current to the output stage, thus turning the series-pass transistor Q17 off and preventing further increase in chip temperature.

The short-circuit protection transistor Q15 is pre-biased from the base-emitter voltage drop of the series-pass transistor Q17 via resistors R12 and R21. As the output current increases, the drop across R11 increases, causing the base voltage of Q15 to increase also. When the output current reaches the preset level, Q15 begins to turn on, shunting the base current of the output stage and preventing any further increase in output current.

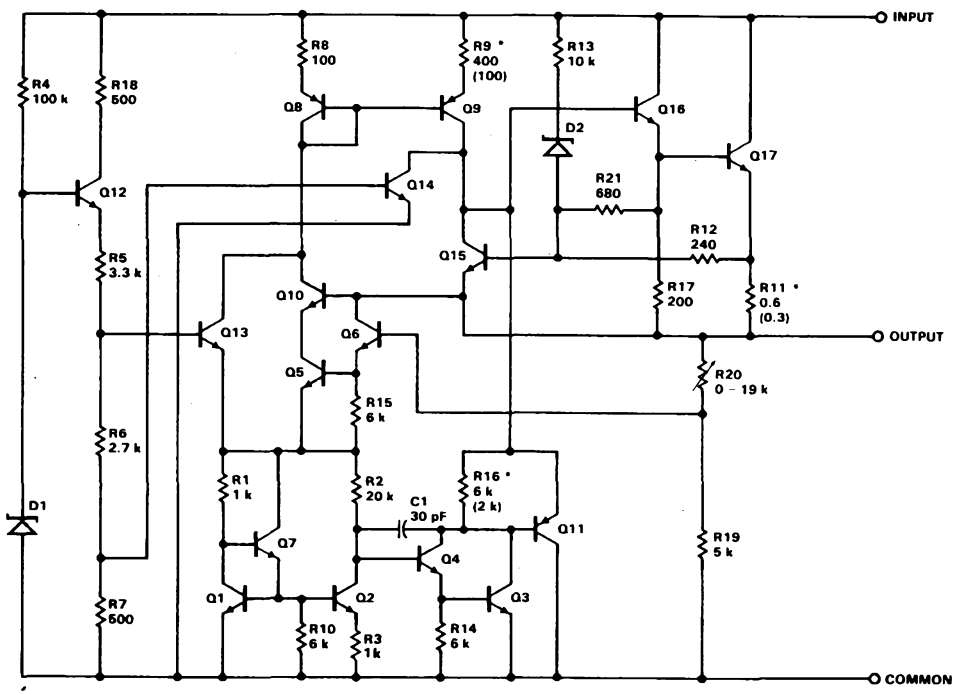

Fig. 1-10 μA78M00 (μA7800*) Equivalent Circuit

Safe-area protection, accomplished via resistors R11, R12, R13, Zener diode D2 and Q15, limits the instantaneous power through the series-pass transistor to a safe value by decreasing the maximum regulator current as the input-output voltage differential is increased.

The μA7800 and μA78M00 are available in popular fixed output voltage options ranging from 5 to 24 V. The output voltages are internally fixed during manufacture by selection of the feedback resistor ratio of R19 and R20. The μA78M00 series is available in the metal TO-39 and plastic TO-220 while the μA7800 series is packaged in the metal TO-3 and plastic TO-220.

μA109 Series

The μA109 series includes the μA109, μA209 and μA309 3-terminal regulators with fixed output voltages of 5 V and 1 A output current capabilities. Schematically, the circuit is identical to that of the μA7805 (*Figure 1-10*) except for R12 which is a 180 Ω resistor; device operation is the same. The lower value of R12 increases the peak output current and changes the characteristics of the safe-area circuit so that the device can deliver higher output current for the same input-output voltage. The μA109 operates over the full military temperature range while the μA209 is for industrial-temperature operation. The μA309 is the relaxed version. All are packaged in the TO-3.

μA78CB, 13.8 V, 2 A Positive Regulator

The μA78CB is a positive 13.8 V 2 A regulator available in metal TO-3 and plastic TO-220 packages. It has the same features as the μA7800 series with 20 W dissipation capability. Schematically, it is identical to the μA7800 of *Figure 1-10* except for the short-circuit sense resistor R11 which is 0.2 Ω to set the peak current over 3 A at 25°C, and the feedback resistor R20 which is 8 k to set the output voltage to a nominal value of 13.8 V. The device is intended as a fixed 13.8 V regulator for home-base CB stations, and as an automotive power supply for driving accessories directly from the AC line through a transformer, a full wave rectifier and a filter capacitor.

μA78H00 Series

The μA78H00 series are hybrid regulators with 5 A output current capability with all the inherent characteristics of the monolithic 3-terminal regulators, *i.e.,* full thermal overload, short-circuit and safe-area protection. The 78H00s are constructed using state-of-the-art hybrid circuit technology and are packaged in hermetically sealed TO-3s providing 50 W power dissipation. They are available with 5, 12 and 15 V options. Each regulator consists of a μA78M00 monolithic chip driving a discrete series-pass element Q1 and two short-circuit detection transistors Q2 and Q3 *(Figure 1-11).* A beryllium-oxide substrate is used in conjuction with an isothermal layout to optimize the thermal characteristics of the device and still maintain electrical isolation between the various chips. This ensures nearly ideal thermal transfer between the series-pass device Q1 and the temperature sensing circuit within the μA78M00, thus providing the thermal-limiting feature to the regulator. Output voltage V_{OUT} is derived from the μA78M00 chip which also provides the basic blocks for the regulator as well as serving as buffer and driver for the series-pass element. When a load is placed across the output terminals, the load current supplied by the μA78M00 is sensed by resistor R2 which then develops a voltage drop that forward biases the emitter-base junction of Q1. At this time, the μA78M00 begins to supply base current to Q1 which supplies the bulk of the load current (≈95%) during operation.

The output circuit is designed so that the worst-case current requirement of the Q1 base added to the current through R2 always remains below the current-limit threshold of the μA78M00. Resistor R1 in conjuction with Q2 and Q3 make up a current sense and limit circuit to protect the series-pass device from excessive current drain. As the output current begins to increase, the voltage drop across R1 starts to forward bias the Q3 emitter-base junction. As Q3 conducts, its collector current flows through the Q2 base; thus Q2 begins to conduct and therefore shunts away some of the current available to the Q1 base. This process continues until a natural state of electrical equilibrium is reached, at which time 78H00 is in a current-limit mode of operation. Capacitor C1 provides frequency stability by adding a pole in the output-circuit transfer function that lowers the overall loop gain below the critical levels at high frequencies.

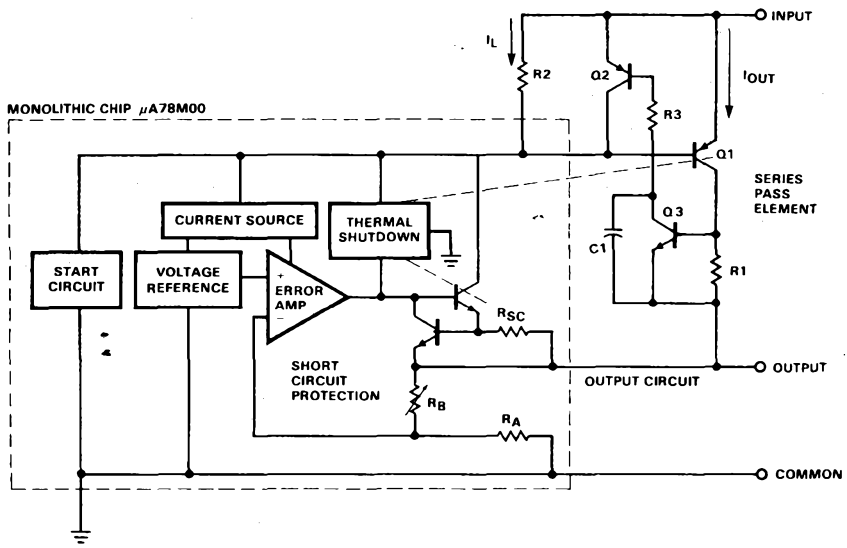

Fig. 1-11 78H00 Block Diagram

Safe area protection is achieved by brute force. The series-pass transistor is capable of handling the short-circuit current at the maximum input voltage rating of the 78H00. Output voltage sensing is performed at the device output pin so that the error amplifier can correct for any output voltage errors caused by finite impedances in the output circuit such as lead bonds and metal traces.

Negative 3-Terminal Regulators

The negative 3-terminal regulators are the complements of the positive regulators discussed above. They are available in the same output voltage options, have the same protective features, and can be used in combination with positive regulators or by themselves. They are available with 0.5 A output current (μA79M00) in TO-39 and TO-220 packages, and 1 A output (μA7900) in TO-3 and TO-220 packages.

μA79M00 Series

The equivalent circuit for the μA79M00 series is shown in *Figure 1-12*. The start-up circuit consists of Zener diode D1 and transistors Q1 and Q2. Once the regulator starts, transistor Q2 is turned off and the reference Zener diode D2 is biased from a current source transistor Q7 whose current is set by the Zener reference D2, Q3, Q4 and the reference resistors R1, R2 and R20. The reference circuit has two temperature compensated levels. The lower reference is a −2.23 V derived from Zener diode D2 and transistors Q3 and Q4. This reference is used in the 5 to 8 V output options. Higher output voltage options use a −6.2 V reference derived from D2, Q6, Q7 and their associated resistors. Note that a fraction of the Q6 base-emitter voltage obtained from R3 and R4 compensates for the positive temperature coefficient of Zener diode D2. The purpose of the two voltage references is to allow a wide output voltage range without a sacrifice in device performance as explained in the Error Amplifier section.

The voltage reference circuit also provides the bias for the error amplifier consisting of Q10 through Q13 via Q9 and R8. The error amplifier is a differential pair with an active load, Q14 and Q15. The reference input (−2.23 V or −6.20 V) to the error amplifier is applied to the base of Q10 (non-inverting input) while the error voltage is applied from the feedback network of R24 and R25 to the base of Q11 (inverting input). The output of the error amplifier is fed to the series-pass transistor Q20 via Q17, R12 and Q18. Frequency compensation of the error amplifier is accomplished with resistors R9, R10 and capacitors C1 and C2. In addition, an external capacitor (from output to ground) is necessary since the series-pass transistor is operating in the common-emitter mode.

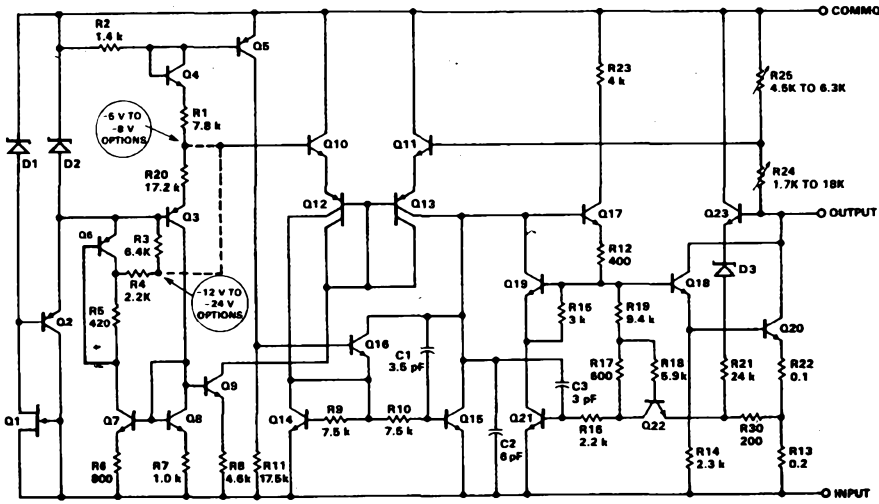

Fig. 1-12 μA79M00 Equivalent Circuit

The μA79M00 series has three protective circuits. Short-circuit protection is provided by sensing the voltage drop across R13. When this drop exceeds 130 mV, transistor Q22 is biased off and Q19 and Q21 are turned on, shunting base drive from Q17 via Q19. As explained earlier in this chapter, the short circuit current is made nearly temperature independent by selecting the area ratio of Q21 and Q22 and the resistance ratio of R17 and R19. R16, R18 and C3 provide compensation for the short-circuit protection circuit, preventing oscillations during short circuit conditions. Thermal overload protection is provided by Q5, Q16, R2 and R11. When the V_{BE} of Q5 decreases sufficiently with rising temperature, Q16 is turned on and current is shunted from Q17. Finally, the safe-area protection circuit, formed by Q23, D3 and resistors R21 and R30, detects the collector-to-emitter voltage of the series-pass transistor Q20 and decreases the maximum available regulator current as the input-output differential voltage is increased.

μA7900 Series

The μA7900 series is very similar to the μA79M00 series except for the short circuit protection scheme (*Figure 1-13*). By removing Q22 and its associated resistors from the μA79M00, the peak output current of the μA7900 is made temperature dependent with a negative temperature coefficient just like the positive 3-terminal regulators.

Positive Adjustable Regulators

Although versatile and easy to use, the 3-terminal regulator has one drawback – the output voltage is internally fixed, thereby limiting the user to around a half-dozen popular output voltages. Applications requiring variable or non-standard output voltages dictate the use of either external components with the 3-terminal devices at a sacrifice in performance or multi-terminal devices at an increase in complexity.

μA78MG/μA78G/μA78HG Positive Adjustable 4-Terminal Regulators

The 4-terminal regulator has solved the dilemma by offering all of the unique features of it 3-terminal counterpart along with an adjustable output determined by an external resistor ratio. The equivalent circuit diagram of the μA78MG/μA78G regulators in *Figure 1-14* is identical to that of the μA78M00/μA7800 series in *Figure 1-10* except that the feedback resistors are omitted and the base of Q6 is brought out as the Control terminal. Component value differences (R9, R11, R16) are shown with the 78G values in parentheses. The μA78MG is a 0.5 A device while the μA78G is a 1 A device. The output current capability can be increased substantially by the use of one or more external transistors. With an available control or feedback terminal and two external resistors, the designer can set the output voltage anywhere from 5 to 30V. The μA78MG is available in the Power Watt, (similar to TO-202) the power mini DIP or the 4-lead TO-39 package. The μA78G is offered in the Power Watt (similar to TO-202) and the 4-lead TO-3 packages.

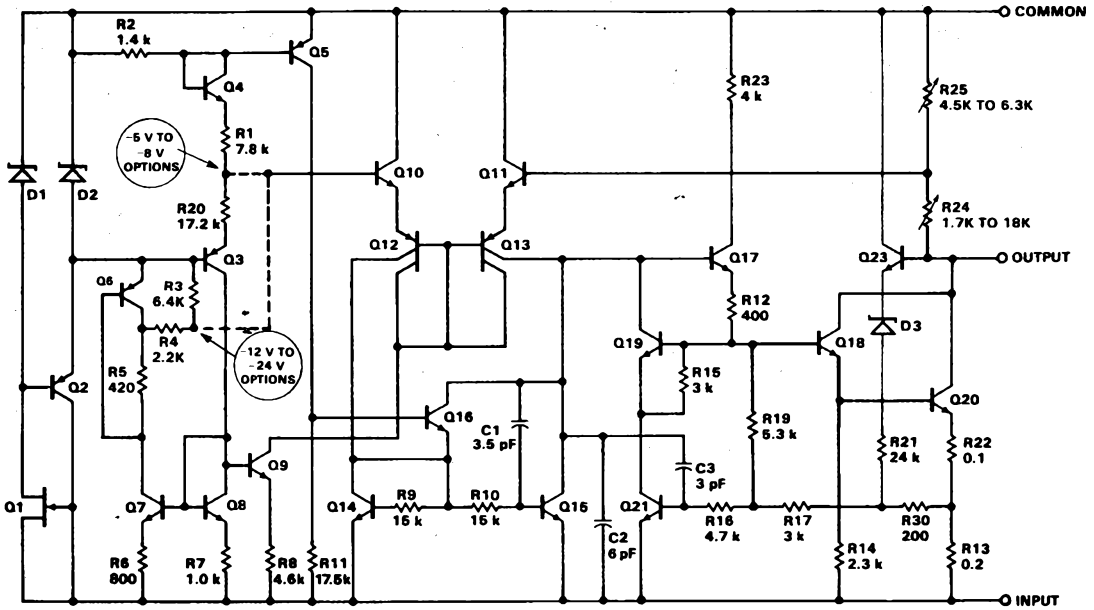

Fig. 1-13 μA7900 Equivalent Circuit

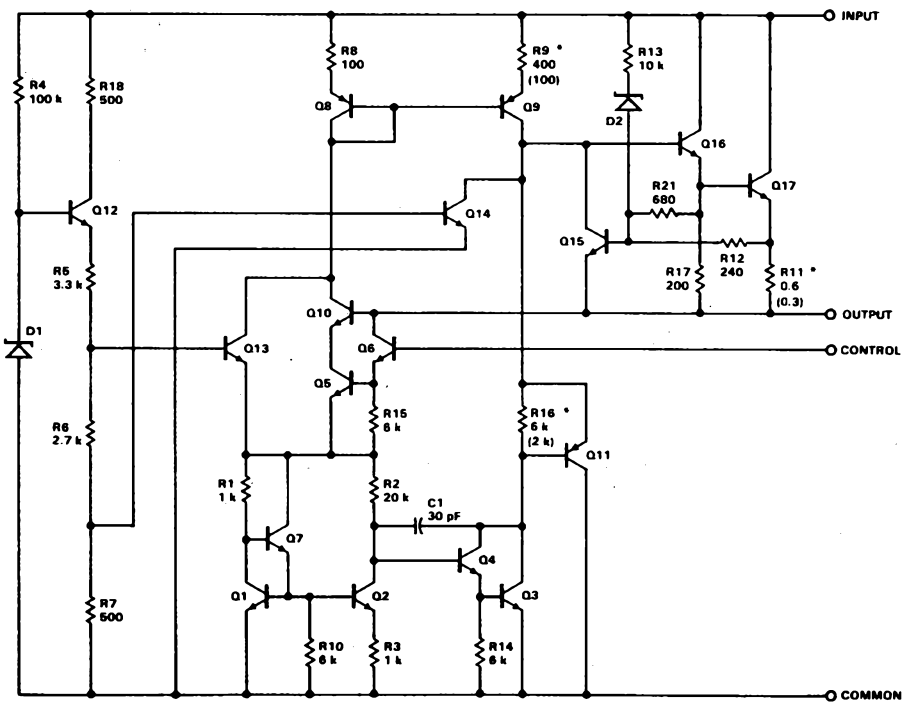

Fig. 1-14 μA78MG (μA78G*) Equivalent Circuit

The 78HG hybrid 4-terminal adjustable regulator with 5 A output current capability is schematically identical to the 78H00 series *(Figure 1-11)* except that the feedback resistors RA and RB are omitted and the inverting input of the error amplifier is brought out as the control terminal. The regulator consists of a μA78MG monolithic chip driving a discrete series-pass transistor Q1 and two short-circuit detection transistors Q2 and Q3. Just as the 78H00 series, the 78HG has all the inherent characteristics of the monolithic regulators and is constructed using state-of-the-art hybrid circuit technology. It is packaged in the 4-lead TO-3 package and is capable of 50 W power dissipation.

μA723 Precision Regulator

The μA723, commonly regarded as a universal building block *(Figure 1-15)* in power supply design, is available in the 14-lead ceramic or plastic DIP and the 10-lead TO-100 and has the following features.

- Internally generated reference voltage directly available in buffered form.
- Both inputs of the error amplifier available for use with other than positive grounded configurations.
- Collector of the internal series-pass device available at a separate lead (V_C).
- Voltage level shifting available (V_Z output) through an internal Zener diode (14-lead DIP version only).
- Adjustable output voltage from 2 to 37 V.
- Output current to 150 mA with no external pass transistor.

Bias supplies for the entire circuit are obtained by first generating a stabilized voltage with respect to the V+ line across Zener diode D1, which is supplied with a constant current from FET Q1. The Zener voltage is then used to drive the bias voltage that controls the current sources to the rest of the regulator. The basic voltage reference elements are Zener diode D2 and the Q6 base-emitter voltage. Q4 and Q5 provide current as well as buffering to D2 so that current may be taken from the reference terminal for certain applications. Resistor R7 and MOS capacitor C1 are included on the chip to eliminate the need for external compensation of the reference loop. Note that the full 7.1 V of the reference need not be tied to the error amplifier. For applications requiring output voltages less than 7.1 V, a fraction of the reference can be taken to the non-inverting input of the error amplifier by merely adding a pair of resistors to divide down the reference.

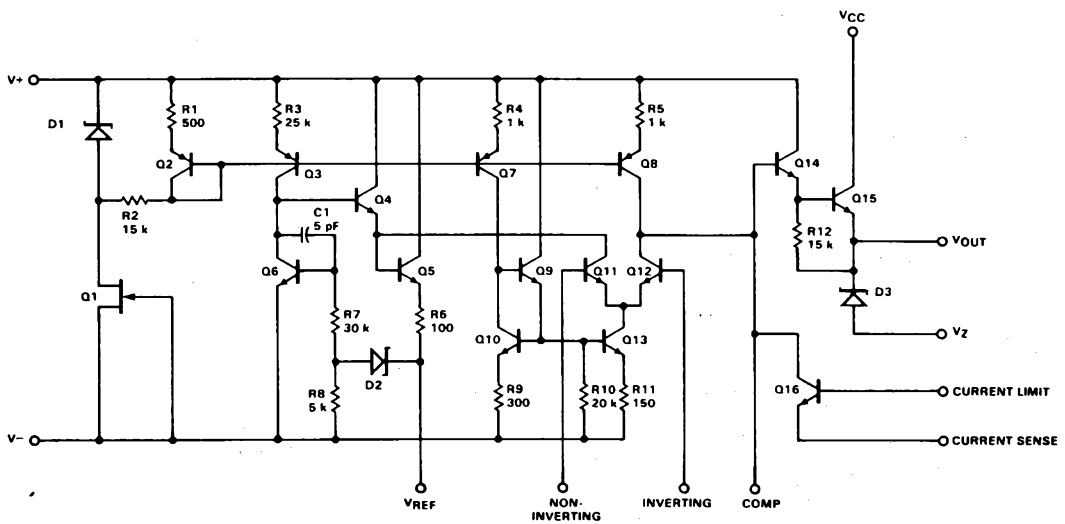

Fig. 1-15 μA723 Precision Voltage Regulator Equivalent Circuit

The error amplifier consists of the differential pair Q11 and Q12 driven by current source Q13 which is mirrored from Q7 by Q10. The active load for Q12 is a pnp current source Q8; therefore, in a balanced condition, *i.e.*, when Q11 and Q12 base voltages are equal, Q11 and Q12 collector currents are both equal. Q11 collector is returned to a stabilized voltage source in the reference supply to maintain high line rejection in the amplifier. In operation, V_{REF}, or a voltage derived from V_{REF}, is applied to the noninverting input (Q11 base) and a voltage proportional to the required output voltage is applied to the inverting input, Q12 base. When the feedback loop is closed via the μA723 output stage and an external series-pass transistor, if used, the two error amplifier inputs are forced into a balanced condition, thus defining the output voltage in terms of V_{REF} and the appropriate resistor ratios.

The output stage consists of a double emitter follower, Q14 and Q15, to prevent excessive loading on the Q12 collector. This, in conjunction with the high impedance of the active load, Q8, allows adequate gain to be obtained from the single stage amplifier. This also simplifies frequency compensation; a single capacitor connected from Q12 collector, Comp terminal, to either Q12 base or ground is sufficient to provide stable operation in all applications. Zener diode D3, available in the dual in-line package version only, is included for level shifting purposes.

Transistor Q16 is the current limiting transistor. When an external current-sensing resistor forward biases the Q16 base-emitter junction at a particular load-current level, the Q16 collector sinks most of the available current from the current source Q8. This cuts off the output stage and limits the output current. Note, by applying a command signal to the base, the current limiting transistor can be used to turn the regulator output voltage completely off.

μA105 Series Regulators

The μA105 series includes the μA105 and μA305, each rated with a maximum output current of 12 mA, the μA305A rated at 45 mA and the μA376 rated at 25 mA *(Figure 1-16)*. These regulators have an adjustable output voltage range as low as 4.5 V. They are packaged in the 8-lead TO-99 or 8-lead Mini Dip.

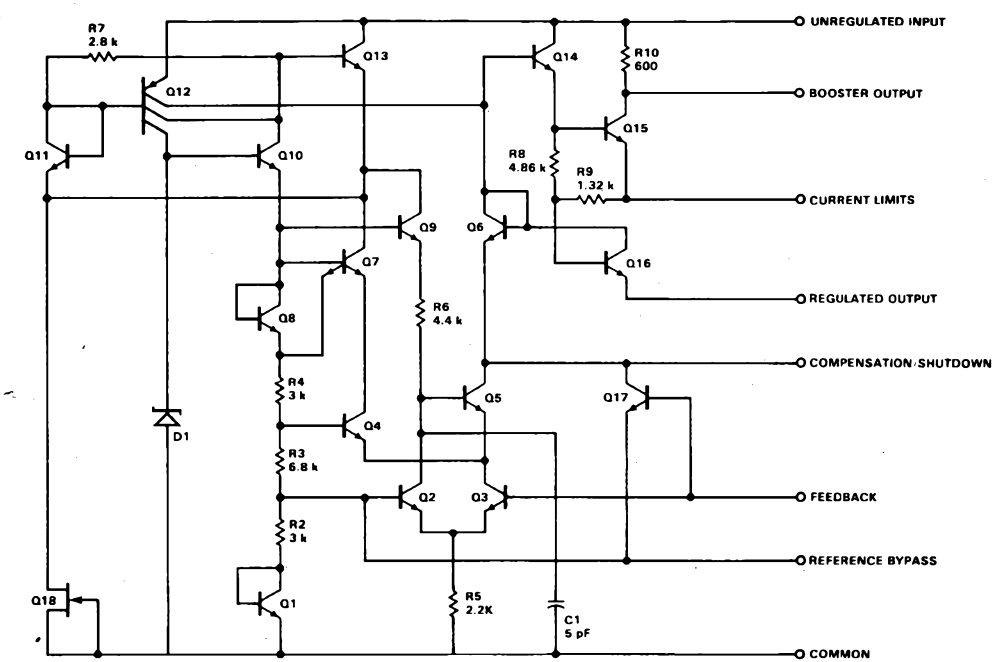

Fig. 1-16 μA105 Series Equivalent Circuit.

The μA105 voltage reference is derived from Zener diode D1 and transistors Q10, Q8 and Q1. By proper selection of R2, R3 and R4, a temperature stable reference of 1.7 V is obtained at the base of Q2. This point is accessible to the user at Reference Bypass, pin 5, so that an external capacitor can be added to bypass any noise coming from the reference Zener diode D1. Start-up of the regulator is achieved through FET Q18 and the multi-collector pnp current-source transistor Q12, which provides the bias current for the reference as well as the error amplifier and the output stage.

The differential pair, Q2 and Q3, forms the first stage of the error amplifier which has a gain of 20. The 1.7 V reference is internally tied to the non-inverting input of the error amplifier and is brought out for external bypassing of the reference. This configuration differs from that of the μA723 since it commits the reference to the non-inverting input and restricts the user to a fixed reference (1.7 V). The inverting input of the error amplifier is the base of Q3 and is brought out to the Feedback terminal. The second stage of the error amplifier consists of Q4 and Q5 with one of the collectors of Q12 as the load. In normal operation, both stages of the error amplifier are balanced over the device operating temperature range, regardless of the absolute value of components, thus giving the error amplifier a good drift characteristic. Frequency compensation is accomplished with internal capacitor C1, which prevents loop oscillations due to the high gain of the error amplifier, and an external integrating capacitor around the error amplifier, which makes the error amplifier insensitive to loading conditions.

The output stage is a double emitter follower consisting of Q14 and Q15. Transistors Q6 and Q16 perform the current-limiting function by removing the drive to the output stage when an overload condition is sensed externally between Current Limit and Regulated Output terminals. Q17 prevents latch-up that may occur with low output voltage settings. Without Q17, should Q3 saturate, it would cut off the second stage of the error amplifier, Q4 and Q5, and cause the output voltage to latch at a voltage nearly equal to the unregulated input.

Negative Adjustable Regulators

Negative regulators are not widely used as positive regulators, therefore, as one might expect, the selection is not as large. Nevertheless, sufficient options are available to cover most applications.

79MG/79G Negative Adjustable 4-Terminal Regulators

The 78MG/79G negative adjustable regulators are similar to their positive counterparts, the 78MG/78G 4-terminal adjustable regulators, and are offered in the same package options. They are derived from the μA79M00 and μA7900 respectively, using the lower of the two available references. Except for the feedback resistors, the μA79MG is schematically identical to the μA79M00 (compare *Figures 1-12* and *1-17*), and the μA79G to the μA7900 (*Figures 1-13* and *1-18*). In the μA79MG/79G, the base of Q11 is brought out as the Control terminal. Device operation is the same except that output adjustment of the μA79MG/79G is left to the user's choice of a pair of external resistors. Both the 79MG and the 79G have an adjustable output range from −30 to −2.23 V with input voltage range from −40 to −7 V. They are designed to deliver continuous load currents of up to 0.5 A for the 79MG and 1 A for the 79G.

μA104 Series Regulators

The μA104 family includes the μA104 and the μA304 regulators that can supply up to 25 mA output current without external pass transistors. The voltage reference and error amplifier circuits are designed so that the output voltage range is adjustable from 0 to −30 V for the μA304 and 0 to −40 V for the μA104. They are packaged in the 10-lead TO-100.

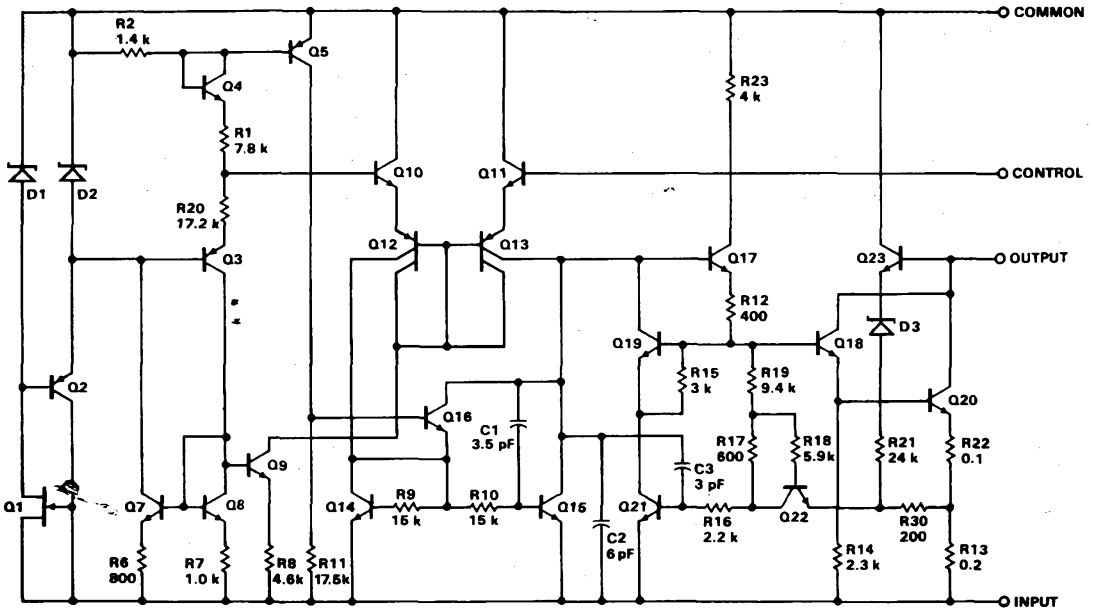

Fig. 1-17 μA79MG Equivalent Circuit

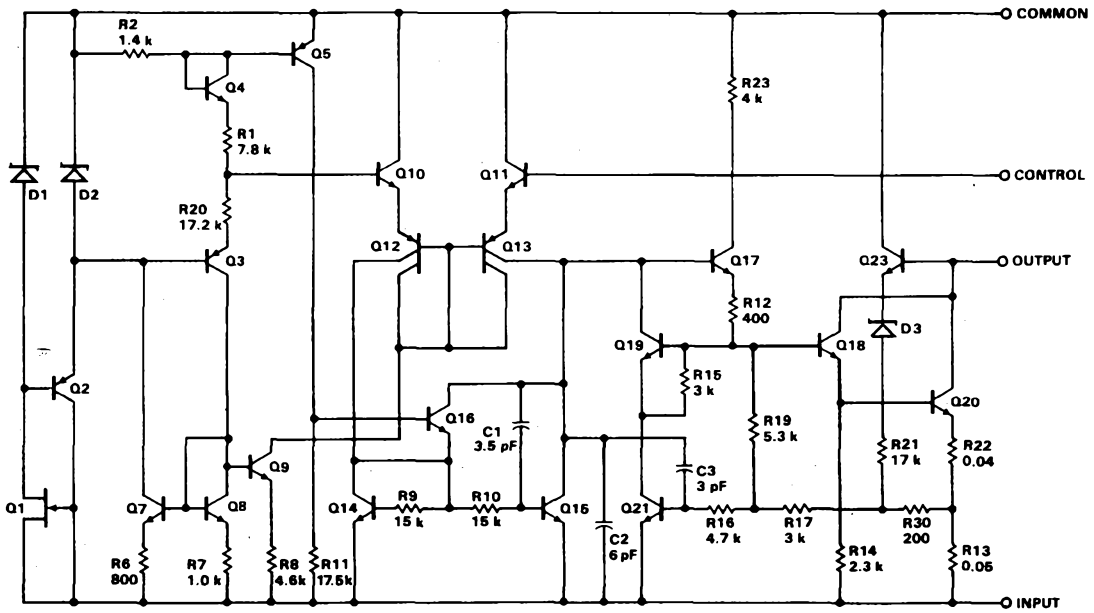

Fig. 1-18 μA79G Equivalent Circuit

Figure 1-19 shows the equivalent circuit of the μA104 family. The reference voltage between the Reference and Reference-Supply terminals is derived from Zener diode D1 and compensated by the series network, Q7, R4, Q2, Q1, Q4, Q5, and R3. This configuration yields a compensated reference of −2.4 V. When a known value resistor is placed between these two terminals, the collector currents of Q1 and Q2 can be fixed. A second resistor connected between the Common and Adjustment terminals provides the reference to the error amplifier, Q18 and Q19, through R17. Emitter-follower transistors Q18 and Q19 drive the common-base dual pnp transistor Q17. Epitaxial FET Q9 biases the current-source transistors Q12 and Q13. By using active collector loads and a triple Darlington output stage, sufficient gain is achieved to prevent the output stage from loading the input stage. R14 limits the base drive to Q23 during saturation, a condition that may occur with low input voltages. The error amplifier operates with common-mode voltages up to ground and consequently the regulator functions with output voltages to 0 V. To prevent the reference circuit from saturating with low input-output differentials, the inverting input of the error amplifier is connected through the divider network of R15 and R16 to the output. R17 matches the impedance seen by the Q19 base and also minimizes offset errors in the amplifier. Transistor Q[illegible]4 is the current limiter and the current limit loop is compensated by R11 and C1.

For stable device operation, an external capacitor is required between output and common. On-chip capacitor C2 compensates for the series resistance of the external capacitor and is brought to the outside for use if additional compensation is required.

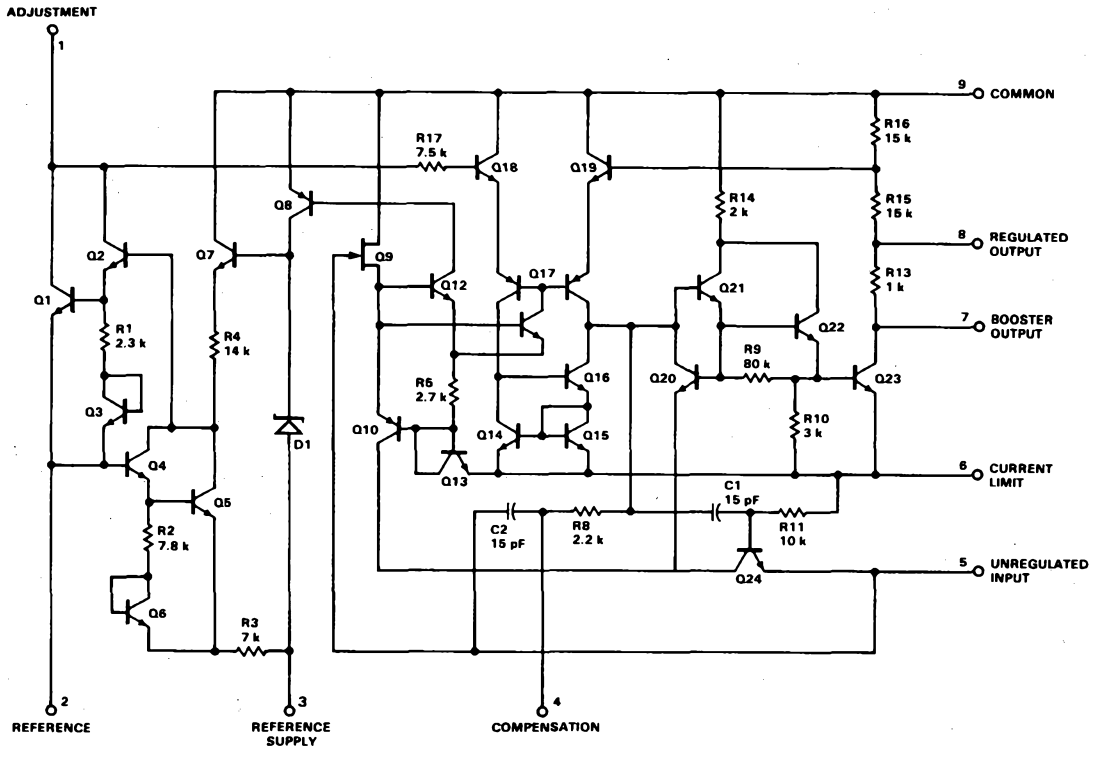

Fig. 1-19 Equivalent Circuit μA104 Series