SERIES uA7800
POSITIVE-VOLTAGE REGULATORS

BULLETIN NO. DL-S 12386, MAY 1976—REVISED SEPTEMBER 1977

- 3-Terminal Regulators
- Output Current up to 1.5 A
- No External Components
- Internal Thermal Overload Protection
- Direct Replacements for Fairchild μA7800 Series
- High Power Dissipation Capability
- Internal Short-Circuit Current Limiting
- Output Transistor Safe-Area Compensation

NOMINAL OUTPUT VOLTAGE	REGULATOR
5 V	uA7805C
6 V	uA7806C
8 V	uA7808C
8.5 V	uA7885C
10 V	uA7810C
12 V	uA7812C
15 V	uA7815C
18 V	uA7818C
22 V	uA7822C
24 V	uA7824C

KC PACKAGE

(TOP VIEW)

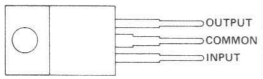

TO-220AB

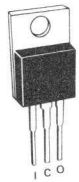

description

This series of fixed-voltage monolithic integrated-circuit voltage regulators is designed for a wide range of applications. These applications include on-card regulation for elimination of noise and distribution problems associated with single-point regulation. One of these regulators can deliver up to 1.5 amperes of output current. The internal current limiting and thermal shutdown features of these regulators make them essentially immune to overload. In addition to use as fixed-voltage regulators, these devices can be used with external components to obtain adjustable output voltages and currents and also as the power-pass element in precision regulators.

schematic

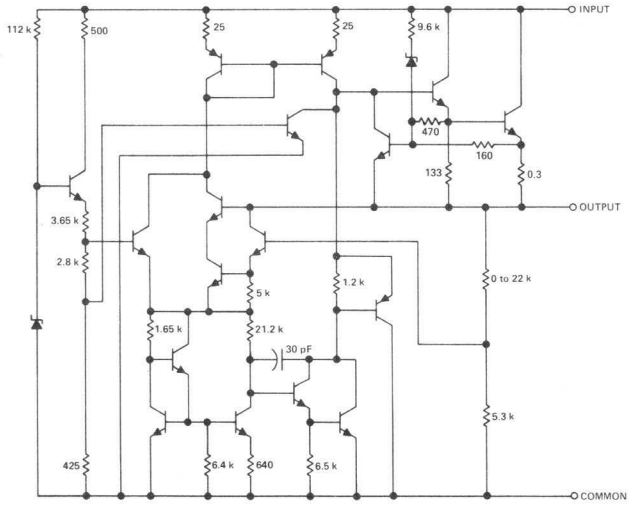

Resistor values shown are nominal and in ohms.

Copyright © 1977 by Texas Instruments Incorporated

977

TEXAS INSTRUMENTS
INCORPORATED
POST OFFICE BOX 5012 • DALLAS, TEXAS 75222

absolute maximum ratings over operating temperature range (unless otherwise noted)

		uA78__C	UNIT
Input voltage	uA7822C, uA7824C	40	V
	All others	35	
Continuous total dissipation at 25°C free-air temperature (see Note 1)		2	W
Continuous total dissipation at (or below) 25°C case temperature (see Note 1)		15	W
Operating free-air, case, or virtual junction temperature range		0 to 150	°C
Storage temperature range		−65 to 150	°C
Lead temperature 1/16 inch from case for 10 seconds		260	°C

Note 1: For operation above 25°C free-air or case temperature, refer to Dissipation Derating Curves, Figure 1 and Figure 2.

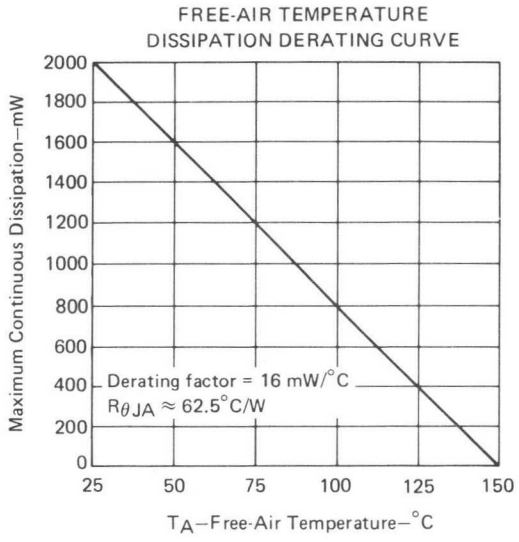

FIGURE 1

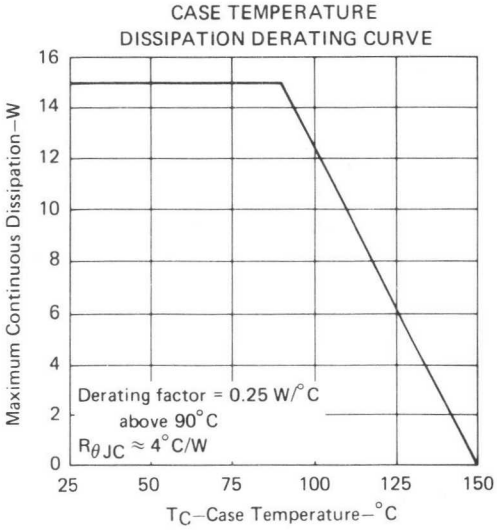

FIGURE 2

recommended operating conditions

		MIN	MAX	UNIT
Input voltage, V_I	uA7805C	7	25	V
	uA7806C	8	25	
	uA7808C	10.5	25	
	uA7885C	10.5	25	
	uA7810C	12.5	28	
	uA7812C	14.5	30	
	uA7815C	17.5	30	
	uA7818C	21	33	
	uA7822C	25	36	
	uA7824C	27	38	
Output current, I_O			1.5	A
Operating virtual junction temperature, T_J		0	125	°C

TEXAS INSTRUMENTS
INCORPORATED
POST OFFICE BOX 5012 • DALLAS, TEXAS 75222

uA7805C electrical characteristics at specified virtual junction temperature, V_I = 10 V, I_O = 500 mA (unless otherwise noted)

PARAMETER	TEST CONDITIONS†		uA7805C			UNIT
			MIN	TYP	MAX	
Output voltage		25°C	4.8	5	5.2	V
	I_O = 5 mA to 1 A, V_I = 7 V to 20 V, $P \leq 15$ W	0°C to 125°C	4.75		5.25	
Input regulation	V_I = 7 V to 25 V	25°C		3	100	mV
	V_I = 8 V to 12 V			1	50	
Ripple rejection	V_I = 8 V to 18 V, f = 120 Hz	0°C to 125°C	62	78		dB
Output regulation	I_O = 5 mA to 1.5 A	25°C		15	100	mV
	I_O = 250 mA to 750 mA			5	50	
Output resistance	f = 1 kHz	0°C to 125°C		0.017		Ω
Temperature coefficient of output voltage	I_O = 5 mA	0°C to 125°C		−1.1		mV/°C
Output noise voltage	f = 10 Hz to 100 kHz	25°C		40		μV
Dropout voltage	I_O = 1 A	25°C		2.0		V
Bias current		25°C		4.2	8	mA
Bias current change	V_I = 7 V to 25 V	0°C to 125°C			1.3	mA
	I_O = 5 mA to 1 A				0.5	
Short-circuit output current		25°C		750		mA
Peak output current		25°C		2.2		A

uA7806C electrical characteristics at specified virtual junction temperature, V_I = 11 V, I_O = 500 mA (unless otherwise noted)

PARAMETER	TEST CONDITIONS†		uA7806C			UNIT
			MIN	TYP	MAX	
Output voltage		25°C	5.75	6	6.25	V
	I_O = 5 mA to 1 A, V_I = 8 V to 21 V, $P \leq 15$ W	0°C to 125°C	5.7		6.3	
Input regulation	V_I = 8 V to 25 V	25°C		5	120	mV
	V_I = 9 V to 13 V			1.5	60	
Ripple rejection	V_I = 9 V to 19 V, f = 120 Hz	0°C to 125°C	59	75		dB
Output regulation	I_O = 5 mA to 1.5 A	25°C		14	120	mV
	I_O = 250 mA to 750 mA			4	60	
Output resistance	f = 1 kHz	0°C to 125°C		0.019		Ω
Temperature coefficient of output voltage	I_O = 5 mA	0°C to 125°C		−0.8		mV/°C
Output noise voltage	f = 10 Hz to 100 kHz	25°C		45		μV
Dropout voltage	I_O = 1 A	25°C		2.0		V
Bias current		25°C		4.3	8	mA
Bias current change	V_I = 8 V to 25 V	0°C to 125°C			1.3	mA
	I_O = 5 mA to 1 A				0.5	
Short-circuit output current		25°C		550		mA
Peak output current		25°C		2.2		A

† All characteristics are measured with a capacitor across the input of 0.33 μF and a capacitor across the output of 0.1 μF. All characteristics except noise voltage and ripple rejection ratio are measured using pulse techniques ($t_w \leq 10$ ms, duty cycles ≤ 5%). Output voltage changes due to changes in internal temperature must be taken into account separately.

TEXAS INSTRUMENTS
INCORPORATED
POST OFFICE BOX 5012 • DALLAS, TEXAS 75222

uA7808C electrical characteristics at specified virtual junction temperature, V_I = 14 V, I_O = 500 mA (unless otherwise noted)

PARAMETER	TEST CONDITIONS†		uA7808C			UNIT
			MIN	TYP	MAX	
Output voltage		25°C	7.7	8	8.3	V
	I_O = 5 mA to 1 A, V_I = 10.5 V to 23 V, P ≤ 15 W	0°C to 125°C	7.6		8.4	
Input regulation	V_I = 10.5 V to 25 V	25°C		6	160	mV
	V_I = 11 V to 17 V			2	80	
Ripple rejection	V_I = 11.5 V to 21.5 V, f = 120 Hz	0°C to 125°C	56	72		dB
Output regulation	I_O = 5 mA to 1.5 A	25°C		12	160	mV
	I_O = 250 mA to 750 mA			4	80	
Output resistance	f = 1 kHz	0°C to 125°C		0.016		Ω
Temperature coefficient of output voltage	I_O = 5 mA	0°C to 125°C		−0.8		mV/°C
Output noise voltage	f = 10 Hz to 100 kHz	25°C		52		μV
Dropout voltage	I_O = 1 A	25°C		2.0		V
Bias current		25°C		4.3	8	mA
Bias current change	V_I = 10.5 V to 25 V	0°C to 125°C			1	mA
	I_O = 5 mA to 1 A				0.5	
Short-circuit output current		25°C		450		mA
Peak output current		25°C		2.2		A

uA7885C electrical characteristics at specified virtual junction temperature, V_I = 15 V, I_O = 500 mA (unless otherwise noted)

PARAMETER	TEST CONDITIONS†		uA7885C			UNIT
			MIN	TYP	MAX	
Output voltage		25°C	8.15	8.5	8.85	V
	I_O = 5 mA to 1 A, V_I = 11 V to 23.5 V, P ≤ 15 W	0°C to 125°C	8.1		8.9	
Input regulation	V_I = 10.5 V to 25 V	25°C		6	170	mV
	V_I = 11 V to 17 V			2	85	
Ripple rejection	V_I = 11.5 V to 21.5 V, f = 120 Hz	0°C to 125°C	54	70		dB
Output regulation	I_O = 5 mA to 1.5 A	25°C		12	170	mV
	I_O = 250 mA to 750 mA			4	85	
Output resistance	f = 1 kHz	0°C to 125°C		0.016		Ω
Temperature coefficient of output voltage	I_O = 5 mA	0°C to 125°C		−0.8		mV/°C
Output noise voltage	f = 10 Hz to 100 kHz	25°C		55		μV
Dropout voltage	I_O = 1 A	25°C		2.0		V
Bias current		25°C		4.3	8	mA
Bias current change	V_I = 10.5 V to 25 V	0°C to 125°C			1	mA
	I_O = 5 mA to 1 A				0.5	
Short-circuit output current		25°C		450		mA
Peak output current		25°C		2.2		A

† All characteristics are measured with a capacitor across the input of 0.33 μF and a capacitor across the output of 0.1 μF. All characteristics except noise voltage and ripple rejection ratio are measured using pulse techniques (t_w ≤ 10 ms, duty cycles ≤ 5%). Output voltage changes due to changes in internal temperature must be taken into account separately.

TEXAS INSTRUMENTS
INCORPORATED
POST OFFICE BOX 5012 • DALLAS, TEXAS 75222

uA7810C electrical characteristics at specified virtual junction temperature, V_I = 17 V, I_O = 500 mA (unless otherwise noted)

PARAMETER	TEST CONDITIONS†		uA7810C			UNIT
			MIN	TYP	MAX	
Output voltage		25°C	9.6	10	10.4	V
	I_O = 5 mA to 1 A, V_I = 12.5 V to 25 V, $P \leq 15$ W	0°C to 125°C	9.5	10	10.5	
Input regulation	V_I = 12.5 V to 28 V	25°C		7	200	mV
	V_I = 14 V to 20 V			2	100	
Ripple rejection	V_I = 13 V to 23 V, f = 120 Hz	0°C to 125°C	55	71		dB
Output regulation	I_O = 5 mA to 1.5 A	25°C		12	200	mV
	I_O = 250 mA to 750 mA			4	100	
Output resistance	f = 1 kHz	0°C to 125°C		0.018		Ω
Temperature coefficient of output voltage	I_O = 5 mA	0°C to 125°C		−1.0		mV/°C
Output noise voltage	f = 10 Hz to 100 kHz	25°C		70		μV
Dropout voltage	I_O = 1 A	25°C		2.0		V
Bias current		25°C		4.3	8	mA
Bias current change	V_I = 12.5 V to 28 V	0°C to 125°C			1	mA
	I_O = 5 mA to 1 A				0.5	
Short-circuit output current		25°C		400		mA
Peak output current		25°C		2.2		A

uA7812C electrical characteristics at specified virtual junction temperature, V_I = 19 V, I_O = 500 mA (unless otherwise noted)

PARAMETER	TEST CONDITIONS†		uA7812C			UNIT
			MIN	TYP	MAX	
Output voltage		25°C	11.5	12	12.5	V
	I_O = 5 mA to 1 A, V_I = 14.5 V to 27 V, $P \leq 15$ W	0°C to 125°C	11.4		12.6	
Input regulation	V_I = 14.5 V to 30 V	25°C		10	240	mV
	V_I = 16 V to 22 V			3	120	
Ripple rejection	V_I = 15 V to 25 V, f = 120 Hz	0°C to 125°C	55	71		dB
Output regulation	I_O = 5 mA to 1.5 A	25°C		12	240	mV
	I_O = 250 mA to 750 mA			4	120	
Output resistance	f = 1 kHz	0°C to 125°C		0.018		Ω
Temperature coefficient of output voltage	I_O = 5 mA	0°C to 125°C		−1.0		mV/°C
Output noise voltage	f = 10 Hz to 100 kHz	25°C		75		μV
Dropout voltage	I_O = 1 A	25°C		2.0		V
Bias current		25°C		4.3	8	mA
Bias current change	V_I = 14.5 V to 30 V	0°C to 125°C			1	mA
	I_O = 5 mA to 1 A				0.5	
Short-circuit output current		25°C		350		mA
Peak output current		25°C		2.2		A

† All characteristics are measured with a capacitor across the input of 0.33 μF and a capacitor across the output of 0.1 μF. All characteristics except noise voltage and ripple rejection ratio are measured using pulse techniques ($t_w \leq 10$ ms, duty cycles ≤ 5%). Output voltage changes due to changes in internal temperature must be taken into account separately.

TEXAS INSTRUMENTS
INCORPORATED
POST OFFICE BOX 5012 • DALLAS, TEXAS 75222

uA7815C electrical characteristics at specified virtual junction temperature, V_I = 23 V, I_O = 500 mA (unless otherwise noted)

PARAMETER	TEST CONDITIONS†		uA7815C			UNIT
			MIN	TYP	MAX	
Output voltage		25°C	14.4	15	15.6	V
	I_O = 5 mA to 1 A, V_I = 17.5 V to 30 V, P ≤ 15 W	0°C to 125°C	14.25		15.75	
Input regulation	V_I = 17.5 V to 30 V	25°C		11	300	mV
	V_I = 20 V to 26 V			3	150	
Ripple rejection	V_I = 18.5 V to 28.5 V, f = 120 Hz	0°C to 125°C	54	70		dB
Output regulation	I_O = 5 mA to 1.5 A	25°C		12	300	mV
	I_O = 250 mA to 750 mA			4	150	
Output resistance	f = 1 kHz	0°C to 125°C		0.019		Ω
Temperature coefficient of output voltage	I_O = 5 mA	0°C to 125°C		−1.0		mV/°C
Output noise voltage	f = 10 Hz to 100 kHz	25°C		90		μV
Dropout voltage	I_O = 1 A	25°C		2.0		V
Bias current		25°C		4.4	8	mA
Bias current change	V_I = 17.5 V to 30 V	0°C to 125°C			1	mA
	I_O = 5 mA to 1 A				0.5	
Short-circuit output current		25°C		230		mA
Peak output current		25°C		2.1		A

uA7818C electrical characteristics at specified virtual junction temperature, V_I = 27 V, I_O = 500 mA (unless otherwise noted)

PARAMETER	TEST CONDITIONS†		uA7818C			UNIT
			MIN	TYP	MAX	
Output voltage		25°C	17.3	18	18.7	V
	I_O = 5 mA to 1 A, V_I = 21 V to 33 V, P ≤ 15 W	0°C to 125°C	17.1		18.9	
Input regulation	V_I = 21 V to 33 V	25°C		15	360	mV
	V_I = 24 V to 30 V			5	180	
Ripple rejection	V_I = 22 V to 32 V, f = 120 Hz	0°C to 125°C	53	69		dB
Output regulation	I_O = 5 mA to 1.5 A	25°C		12	360	mV
	I_O = 250 mA to 750 mA			4	180	
Output resistance	f = 1 kHz	0°C to 125°C		0.022		Ω
Temperature coefficient of output voltage	I_O = 5 mA	0°C to 125°C		−1.0		mV/°C
Output noise voltage	f = 10 Hz to 100 kHz	25°C		110		μV
Dropout voltage	I_O = 1 A	25°C		2.0		V
Bias current		25°C		4.5	8	mA
Bias current change	V_I = 21 V to 33 V	0°C to 125°C			1	mA
	I_O = 5 mA to 1 A				0.5	
Short-circuit output current		25°C		200		mA
Peak output current		25°C		2.1		A

† All characteristics are measured with a capacitor across the input of 0.33 μF and a capacitor across the output of 0.1 μF. All characteristics except noise voltage and ripple rejection ratio are measured using pulse techniques (t_w ≤ 10 ms, duty cycles ≤ 5%). Output voltage changes due to changes in internal temperature must be taken into account separately.

TEXAS INSTRUMENTS
INCORPORATED
POST OFFICE BOX 5012 • DALLAS, TEXAS 75222

uA7822C electrical characteristics at specified virtual junction temperature, V_I = 31 V, I_O = 500 mA (unless otherwise noted)

PARAMETER	TEST CONDITIONS†			uA7822C			UNIT
				MIN	TYP	MAX	
Output voltage			25°C	21.1	22	22.9	V
	I_O = 5 mA to 1 A, $P \leq 15$ W	V_I = 25 V to 36 V,	0°C to 125°C	20.9		23.1	
Input regulation	V_I = 25 V to 36 V		25°C		17	440	mV
	V_I = 26 V to 34 V				6	220	
Ripple rejection	V_I = 26 V to 36 V,	f = 120 Hz	0°C to 125°C	51	67		dB
Output regulation	I_O = 5 mA to 1.5 A		25°C		12	440	mV
	I_O = 250 mA to 750 mA				4	220	
Output resistance	f = 1 kHz		0°C to 125°C		0.028		Ω
Temperature coefficient of output voltage	I_O = 5 mA		0°C to 125°C		−1.3		mV/°C
Output noise voltage	f = 10 Hz to 100 kHz		25°C		160		μV
Dropout voltage	I_O = 1 A		25°C		2.0		V
Bias current			25°C		4.6	8	mA
Bias current change	V_I = 25 V to 36 V		0°C to 125°C			1	mA
	I_O = 5 mA to 1 A					0.5	
Short-circuit output current			25°C		175		mA
Peak output current			25°C		2.1		A

uA7824C electrical characteristics at specified virtual junction temperature, V_I = 33 V, I_O = 500 mA (unless otherwise noted)

PARAMETER	TEST CONDITIONS†			uA7824C			UNIT
				MIN	TYP	MAX	
Output voltage			25°C	23	24	25	V
	I_O = 5 mA to 1 A, $P \leq 15$ W	V_I = 27 V to 38 V,	0°C to 125°C	22.8		25.2	
Input regulation	V_I = 27 V to 38 V		25°C		18	480	mV
	V_I = 30 V to 36 V				6	240	
Ripple rejection	V_I = 28 V to 38 V,	f = 120 Hz	0°C to 125°C	50	66		dB
Output regulation	I_O = 5 mA to 1.5 A		25°C		12	480	mV
	I_O = 250 mA to 750 mA				4	240	
Output resistance	f = 1 kHz		0°C to 125°C		0.028		Ω
Temperature coefficient of output voltage	I_O = 5 mA		0°C to 125°C		−1.5		mV/°C
Output noise voltage	f = 10 Hz to 100 kHz		25°C		170		μV
Dropout voltage	I_O = 1 A		25°C		2.0		V
Bias current			25°C		4.6	8	mA
Bias current change	V_I = 27 V to 38 V		0°C to 125°C			1	mA
	I_O = 5 mA to 1 A					0.5	
Short-circuit output current			25°C		150		mA
Peak output current			25°C		2.1		A

† All characteristics are measured with a capacitor across the input of 0.33 μF and a capacitor across the output of 0.1 μF. All characteristics except noise voltage and ripple rejection ratio are measured using pulse techniques ($t_w \leq 10$ ms, duty cycles ≤ 5%). Output voltage changes due to changes in internal temperature must be taken into account separately.